ПІДТВЕРДЖУВАЛЬНЕ ПОВІДОМЛЕННЯ

Державне підприємство
«Український науково-дослідний і навчальний центр
проблем стандартизації, сертифікації та якості»
(ДП «УкрНДНЦ»)

Наказ від 21.12.2019 № 472

EN 779:2012

Particulate air filters for general ventilation —
Determination of the filtration performance

прийнято як національний стандарт
методом підтвердження за позначенням

ДСТУ EN 779:2019
(EN 779:2012, IDT)

Фільтри повітря для загальної вентиляції.
Визначення ефективності фільтрації

З наданням чинності від 2020–01–01

Відповідає офіційному тексту

З питань придбання
офіційного видання звертайтесь до
національного органу стандартизації
(ДП «УкрНДНЦ» http://uas.org.ua)

EUROPEAN STANDARD
NORME EUROPÉENNE
EUROPÄISCHE NORM

EN 779

April 2012

ICS 91.140.30

Supersedes EN 779:2002

English Version

Particulate air filters for general ventilation - Determination of the filtration performance

Filtres à air de ventilation générale pour l'élimination des particules - Détermination des performances de filtration

Partikel-Luftfilter für die allgemeine Raumlufttechnik - Bestimmung der Filterleistung

This European Standard was approved by CEN on 14 April 2011.

CEN members are bound to comply with the CEN/CENELEC Internal Regulations which stipulate the conditions for giving this European Standard the status of a national standard without any alteration. Up-to-date lists and bibliographical references concerning such national standards may be obtained on application to the CEN-CENELEC Management Centre or to any CEN member.

This European Standard exists in three official versions (English, French, German). A version in any other language made by translation under the responsibility of a CEN member into its own language and notified to the CEN-CENELEC Management Centre has the same status as the official versions.

CEN members are the national standards bodies of Austria, Belgium, Bulgaria, Croatia, Cyprus, Czech Republic, Denmark, Estonia, Finland, France, Germany, Greece, Hungary, Iceland, Ireland, Italy, Latvia, Lithuania, Luxembourg, Malta, Netherlands, Norway, Poland, Portugal, Romania, Slovakia, Slovenia, Spain, Sweden, Switzerland, Turkey and United Kingdom.

EUROPEAN COMMITTEE FOR STANDARDIZATION
COMITÉ EUROPÉEN DE NORMALISATION
EUROPÄISCHES KOMITEE FÜR NORMUNG

Management Centre: Avenue Marnix 17, B-1000 Brussels

© 2012 CEN All rights of exploitation in any form and by any means reserved worldwide for CEN national Members.

Ref. No. EN 779:2012: E

Contents

Foreword 4
Introduction 5
1 Scope 7
2 Normative references 7
3 Terms and definitions 7
4 Symbols and abbreviated terms 11
5 Requirements 12
6 Classification 14
7 Test rig and equipment 15
7.1 Test conditions 15
7.2 Test rig 15
7.3 Aerosol generation – DEHS Test Aerosol 17
7.4 Aerosol sampling system 18
7.5 Flow measurement 19
7.6 Particle counter 19
7.7 Differential pressure measuring equipment 19
7.8 Dust feeder 19
8 Qualification of test rig and apparatus 23
8.1 Air velocity uniformity in the test duct 23
8.2 Aerosol uniformity in the test duct 23
8.3 Particle counter sizing accuracy 24
8.4 Particle counter zero test 25
8.5 Particle counter overload test 25
8.6 100 % efficiency test 25
8.7 Zero % efficiency test 25
8.8 Aerosol generator response time 26
8.9 Pressure equipment calibration 26
8.10 Pressure drop checking 26
8.11 Dust feeder air flow rate 26
8.12 Summary of qualification requirements 27
8.13 Apparatus maintenance 28
9 Test materials 28
9.1 Test air - cleanliness, temperature and humidity 28
9.2 Test aerosol 28
9.3 Loading dust 29
9.4 Final filter 29
10 Test procedure for the filter 30
10.1 Preparation of filter to be tested 30
10.2 Initial pressure drop 30
10.3 Initial efficiency 30
10.3.1 General 30
10.3.2 Efficiency measurement 30
10.4 Dust loading 31
10.4.1 Dust loading procedure 31
10.4.2 Arrestance 32
10.4.3 Efficiency 33
10.4.4 Average efficiency 33
10.4.5 Test dust capacity 33

11 Test method for discharging of filter material ... 34
11.1 General ... 34
11.2 Equipment ... 34
11.3 Preparation of test samples ... 35
11.4 Measurement of the filter medium efficiency ... 35
11.4.1 General ... 35
11.4.2 Isopropanol test ... 35
11.4.3 Expression of results ... 36
11.5 Report ... 36

12 Uncertainty calculation of the test results ... 37

13 Reporting ... 38
13.1 General ... 38
13.2 Interpretation of test reports ... 39
13.3 Summary ... 39
13.4 Efficiency ... 41
13.5 Pressure drop and air flow rate ... 41
13.6 Arrestance and test dust capacity ... 42
13.7 Marking ... 42

Annex A (informative) Shedding from filters ... 51
A.1 General ... 51
A.2 Shedding ... 51
A.2.1 Particle bounce ... 51
A.2.2 Release of fibres or particulate matter from filter material ... 51
A.2.3 Re-entrainment of particles ... 51
A.3 Testing ... 52
A.4 References ... 52

Annex B (informative) Commentary ... 53
B.1 General ... 53
B.2 Classification ... 53
B.3 Test ... 53
B.3.1 Test aerosol ... 53
B.3.2 Loading dust ... 54
B.3.3 Distribution and sampling of aerosols ... 54
B.3.4 Particle counter characteristics ... 54
B.3.5 Flat sheet test ... 54
B.4 Filtration characteristics ... 55
B.4.1 General ... 55
B.4.2 Pressure drop ... 55
B.4.3 Discharged efficiency ... 55

Annex C (informative) Pressure drop calculation ... 56

Annex D (informative) Example of a completed test report ... 58
D.1 Example of test reports ... 58
D.2 Examples of calculations ... 66
D.3 Final results at 450 Pa ... 69

Bibliography ... 70

Foreword

This document (EN 779:2012) has been prepared by Technical Committee CEN/TC 195 “Air filters for general air cleaning”, the secretariat of which is held by UNI.

This European Standard shall be given the status of a national standard, either by publication of an identical text or by endorsement, at the latest by October 2012, and conflicting national standards shall be withdrawn at the latest by October 2012.

Attention is drawn to the possibility that some of the elements of this document may be the subject of patent rights. CEN [and/or CENELEC] shall not be held responsible for identifying any or all such patent rights.

This document supersedes EN 779:2002.

EN 779:2012 is based on the test method according to EN 779:2002. It contains extensive test rig qualification procedures together with procedures which give some information regarding the real life behaviour of particulate air filters (see ”Introduction”).

Annexes A to D are informative.

According to the CEN/CENELEC Internal Regulations, the national standards organizations of the following countries are bound to implement this European Standard: Austria, Belgium, Bulgaria, Croatia, Cyprus, Czech Republic, Denmark, Estonia, Finland, France, Germany, Greece, Hungary, Iceland, Ireland, Italy, Latvia, Lithuania, Luxembourg, Malta, Netherlands, Norway, Poland, Portugal, Romania, Slovakia, Slovenia, Spain, Sweden, Switzerland, Turkey and the United Kingdom.

Introduction

General

The procedures described in this standard have been developed from those given in EN 779:2002. The basic design of test rig given in EN 779:2002 is retained. A challenge aerosol of DEHS (or equivalent) is dispersed evenly across the duct upstream of the filter being tested. Representative upstream and downstream air samples are analysed by an optical particle counter (OPC) to provide filter particle size efficiency data.

Classification

The EN 779:2002 classification system (comprising groups F and G filters) has been changed to three groups (F-, M- and G-filters).

Filters found to have an average efficiency value of less then 40 % of 0,4 µm particles will be allocated to group G and the efficiency reported as "< 40 %". The classification of G filters (G1 - G4) is based on their average arrestance with the loading dust.

Filters found to have an average efficiency value from 40 % to less than 80 % of 0,4 µm particles will be allocated to group M (M5, M6) and the classification is based on their average efficiency (0,4 µm). The filter classes F5 and F6 have changed to M5 and M6, but with same requirements, as in the old classification system.

Filters found to have an average efficiency of 80 % or more of 0,4 µm particles will be allocated to group F (F7-F9) and the classification is based on their average efficiency (0,4 µm) as in the old system and the minimum efficiency during the test.

Test aerosol

A challenge aerosol of DEHS (or equivalent) was chosen for the efficiency test for the following reasons:

— Experience has already been gained by users of EN 779:2002 and Eurovent 4/9 test method so that much suitable equipment already exists.

— Liquid aerosols is easy to generate in the concentrations, size range and degree of consistency required.

— Undiluted DEHS is used to give a non charged aerosol.

— Spherical latex particles are used to calibrate particle counters. The determination of the particle size of spherical liquid particles using optical particle counters is more accurate than would be the case with solid particles of non-spherical salt and test dusts.

Filtration characteristics

Initiatives to address the potential problems of particle re-entrainment and shedding from filters have been included in Annex A.

In an ideal filtration process, each particle would be permanently arrested at the first contact with a filter fibre, but incoming particles may impact on a captured particle and dislodge it into the air stream. Fibres or particles from the filter itself could also be released, due to mechanical forces. From the user's point of view it might be important to know this, but such behaviour would probably not be detected by a particle counter system according to this standard.

Certain types of filter media rely on electrostatic effects to achieve high efficiencies at low resistance to air flow. Exposure to some types of challenge, such as combustion particles in normal atmospheric air or oil mist, may neutralise such charges with the result that filter performance suffers. It is important that the users are aware of the potential for performance degradation when loss of charge occurs. It is also important that means be available for

identifying cases where the potential exists. The discharge test procedure described provides techniques for identifying this type of behaviour. This procedure is used to determine whether the filter efficiency is dependent on the electrostatic removal mechanism and to provide quantitative information about the importance of the electrostatic removal.

1 Scope

This European Standard refers to particulate air filters for general ventilation. These filters are classified according to their performance as measured in this test procedure.

This European Standard contains requirements to be met by particulate air filters. It describes testing methods and the test rig for measuring filter performance.

In order to obtain results for comparison and classification purposes, particulate air filters shall be tested against two synthetic aerosols, a fine aerosol for measurement of filtration efficiency as a function of particle size within a particle size range 0,2 µm to 3,0 µm, and a coarse one for obtaining information about test dust capacity and, in the case of coarse filters, filtration efficiency with respect to coarse loading dust (arrestance).

This European Standard applies to air filters having an initial efficiency of less than 98 % with respect to 0,4 µm particles. Filters shall be tested at an air flow rate between 0,24 m^3/s (850 m^3/h) and 1,5 m^3/s (5400 m^3/h).

The performance results obtained in accordance with this standard cannot by themselves be quantitatively applied to predict performance in service with regard to efficiency and lifetime. Other factors influencing performance to be taken into account are described in Annex A (informative).

2 Normative references

The following documents, in whole or in part, are normatively referenced in this document and are indispensable for its application. For dated references, only the edition cited applies. For undated references, the latest edition of the referenced document (including any amendments) applies.

EN ISO 5167-1:2003, *Measurement of fluid flow by means of pressure differential devices inserted in circular cross-section conduits running full — Part 1:General principles and requirements (ISO 5167-1:2003)*

ISO 2854:1976, *Statistical interpretation of data — Techniques of estimation and tests relating to means and variances*

ISO 12103-1:1997, *Road vehicles — Test dust for filter evaluation — Part 1: Arizona test dust*

3 Terms and definitions

For the purposes of this document, the following terms and definitions apply.

3.1
arrestance
weighed (mass) removal of loading dust

3.2
average arrestance - A_m
ratio of the total amount of loading dust retained by the filter to the total amount of dust fed up to final test pressure drop

Note 1 to entry: Average arrestance is used for classification of G-filters.

3.3
average efficiency - E_m
weighted average of the efficiencies of 0,4 µm particles for the different specified dust loading levels up to final test pressure drop

Note 1 to entry: Average efficiency is used for classification of M and F-filters.

3.4
average efficiency - $E_{i,j}$
average efficiency for a size range "i" at different dust loading intervals "j"

3.5
average discharged efficiency - $\overline{E}_{D,i}$
average efficiency for a size range "i" after discharging filter samples

3.6
average untreated efficiency - $\overline{E}_{U,i}$
average efficiency for a size range "i" of untreated filter samples

3.7
charged filter
filter which is electrostatically charged or polarised

3.8
coarse filter
filter classified in one of the classes G1 to G4

3.9
counting rate
number of counting events per unit of time

3.10
DEHS
liquid (DiEthylHexylSebacate) for generating the test aerosol

3.11
discharged efficiency
efficiency of filter media after having been discharged by isopropanol

3.12
test dust capacity
amount of loading dust retained by the filter up to final test pressure drop

3.13
efficiency
see initial efficiency, discharged efficiency, minimum efficiency and average efficiencies

3.14
face area
area of the inside section of the test duct immediately upstream of the filter under test

Note 1 to entry: Nominal values 0,61 m × 0,61 m = 0,372 m^2.

3.15
face velocity
air flow rate divided by the face area

3.16
final filter
air filter used to collect the loading dust passing the filter under test

3.17
final pressure drop - recommended
maximum operating pressure drop of the filter as recommended by the manufacturer at rated air flow

3.18
final test pressure drop
pressure drop up to which the filtration performance is measured for classification purposes

3.19
fine filter
filter classified in one of the classes F7 to F9

3.20
HEPA filter
High Efficiency Particulate Air filter, classes H13 to H14 according to EN 1822-1

3.21
initial arrestance
arrestance of the first 30 g loading dust increment

3.22
initial efficiency
efficiency of the clean filter operating at the test air flow rate

Note 1 to entry: For each size range of selected particles.

3.23
initial pressure drop
pressure drop of the clean filter operating at its test air flow rate

3.24
isokinetic sampling
sampling of the air within a duct such the probe inlet air velocity is the same as the velocity in the duct at the sampling point

3.25
loading dust
same as synthetic dust

3.26
mean diameter
geometric average of the size range diameter

3.27
media velocity
air flow rate divided by the net effective filtering area

Note 1 to entry: Expressed in m/s to an accuracy of three significant figures.

3.28
medium filter
filter classified in one of the classes M5 or M6

3.29
minimum efficiency
lowest efficiency among the discharged efficiency, initial efficiency and the lowest efficiency throughout the loading procedure of the test

Note 1 to entry: Minimum efficiency is used for classification of F-filters.

3.30
net effective filtering area
area of filter medium in the filter which collects dust

3.31
particle bounce
describes the behaviour of particles that impinge on the filter without being retained

3.32
particle size
equivalent optical diameter of a particle

3.33
particle number concentration
number of particles per unit of volume of the test air

3.34
penetration
ratio of the particle concentration downstream to upstream of the filter

3.35
re-entrainment
releasing to the air flow of particles previously collected on the filter

3.36
shedding
releasing to the air flow of particles due to particle bounce and re-entrainment effects, and to the release of fibres or particulate matter from the filter or filtering material

3.37
synthetic dust
dust specifically formulated for determining the test dust capacity and arrestance of the filter

3.38
test aerosol
aerosol used for determining the efficiency of the filter

3.39
test air flow rate
volumetric air flow rate through the filter under test

Note 1 to entry: Expressed in m^3/s for a reference air density of 1,20 kg/m^3.

3.40
test air
air to be used for testing purposes

3.41
test dust capacity
amount of loading test dust kept by filter up to final test pressure drop

3.42
ULPA-Filter
Ultra Low Penetration Air Filter, classes U15 to U17 according to EN 1822-1

3.43
untreated efficiency
efficiency of untreated filter samples

4 Symbols and abbreviated terms

For the application of this European Standard, the following symbols and abbreviated terms apply.

A	Arrestance
A_j	Arrestance in loading phase "j", %
A_m	Average arrestance during test to final test pressure drop, %
CL	Concentration limits of particle counter
CV	Coefficient of variation
CV_i	Coefficient of variation in size range "i"
DHC	Dust holding capacity (deprecated). see TDC
d_i	Size range diameter or mean diameter in a size range "i", µm
d_l	Lower border diameter in a size range, µm
d_u	Upper border diameter in a size range, µm
E_i	Average initial efficiency of size range "i", %
$E_{i,j}$	The average efficiency for size range "i" after dust loading phase "j", %
$E_{m,i}$	Average efficiency of size range "i" during test up to final test pressure drop, %
E_m	Average efficiency of 0,4 µm particles during test up to final test pressure drop (used for classification), %
$\overline{E}$	Average efficiency, %
$\overline{E}_{D,i}$	Average efficiency of conditioned (discharged) media samples for size range "i"
$\overline{E}_{D,s,i}$	Average efficiency of conditioned (discharged) media sample "s" and for size range "i"
$\overline{E}_{U,i}$	Average efficiency of untreated media samples for size range "i"
$\overline{E}_{U,s,i}$	Average efficiency of untreated media sample "s" and for size range "i"
F7 to F9	Fine filter classes
G1 to G4	Coarse filter classes
M5, M6	Medium filter classes
M_j	Mass of dust fed to the filter during loading phase "j", g
$mean$	Mean value
$mean_i$	Mean value in size range "i"
m_d	Dust in duct after filter, g
m_j	Mass of dust passing the filter at the dust loading phase "j", g
m_{tot}	Cumulative mass of dust fed to filter, g
m_1	Mass of final filter before dust increment, g
m_2	Mass of final filter after dust increment, g
N_i	Number of particles in size range "i" upstream of the filter
n	Number of points
n_i	Number of particles in size range "i" downstream of the filter
OPC	Optical particle counter

p	Pressure, Pa
p_a	Absolute air pressure upstream of filter, kPa
$p_{D,s}$	Pressure drop of conditioned (discharged) sample “s”
p_{sf}	Air flow meter static pressure, kPa
$p_{U,s}$	Pressure drop of untreated sample “s”
q_m	Mass flow rate at air flow meter, kg/s
q_V	Air flow rate at filter, m^3/s
q_{Vf}	Air flow rate at air flow meter, m^3/s
s	Subscript indicating sample number (1, 2, 3, ...)
t	Temperature upstream of filter, ºC
t_f	Temperature at air flow meter, ºC
$t_{(1-\frac{\alpha}{2})}$	Distribution variable
TDC	Test dust capacity, g
U	Uncertainty, % units
δ	Standard deviation
δ_i	Standard deviation for size range "i"
ν	Number of degrees of freedom
ρ	Air density of air, kg/m^3
φ	Relative humidity upstream of filter, %
Δm	Dust increment, g
Δm_{ff}	Mass gain of final filter, g
Δp	Filter pressure drop, Pa
Δp_f	Air flow meter differential pressure, Pa
$\Delta p_{1,20}$	Filter pressure drop at air density 1,20 kg/m^3, Pa

ANSI	American National Standards Institute
ASHRAE	American Society of Heating, Refrigerating and Air Conditioning Engineers
ASTM	American Society for Testing and Materials
CAS	Chemical Abstracts Service
CEN	European Committee for Standardization
EN	European Norm
EUROVENT	European Committee of Air Handling and Refrigeration Equipment Manufacturers
ISO	International Organization for Standardization

5 Requirements

The filter shall be designed or marked so as to prevent incorrect mounting. The filter shall be designed so that when correctly mounted in the ventilation duct, no leak occurs at the sealing edge.

The complete filter (filter and frame) shall be made of material suitable to withstand normal usage and exposures to those temperatures, humidities and corrosive environments that are likely to be encountered.

The complete filter shall be designed so that it will withstand mechanical constraints that are likely to be encountered during normal use. Dust or fibres released from the filter media by air flow through the filter shall not constitute a hazard or nuisance for the people (or devices) exposed to filtered air.

6 Classification

Filters are classified according to their average efficiency or average arrestance under the following test conditions:

— the air flow shall be 0,944 m^3/s (3 400 m^3/h) if the manufacturer does not specify any rated air flow rate;

— 250 Pa maximum final test pressure drop for Coarse (G) filters;

— 450 Pa maximum final test pressure drop for Medium (M) and Fine (F) filters.

If the filters are tested at 0,944 m^3/s and at maximum final test pressure drops, they are classified according to Table 1. For instance G3, F7.

Filters tested at airflows and final test pressure drops different from those above shall be classified according to Table 1, and the classification shall be qualified by test conditions in parentheses, e.g. G4 (0,7 m^3/s, 200 Pa), F7 (1,25 m^3/s).

Table 1— Classification of air filters [1)]

Group	Class	Final test pressure drop Pa	Average arrestance (A_m) of synthetic dust %	Average efficiency (E_m) of 0,4 µm particles %	Minimum Efficiency [a] of 0,4 µm particles %
Coarse	G1	250	$50 \leq A_m < 65$	-	-
	G2	250	$65 \leq A_m < 80$	-	-
	G3	250	$80 \leq A_m < 90$	-	-
	G4	250	$90 \leq A_m$	-	-
Medium	M5	450	-	$40 \leq E_m < 60$	-
	M6	450	-	$60 \leq E_m < 80$	-
Fine	F7	450	-	$80 \leq E_m < 90$	35
	F8	450	-	$90 \leq E_m < 95$	55
	F9	450	-	$95 \leq E_m$	70

[a] Minimum efficiency is the lowest efficiency among the initial efficiency, discharged efficiency and the lowest efficiency throughout the loading procedure of the test.

1) The characteristics of atmospheric dust vary widely in comparison with those of the synthetic loading dust used in the tests. Because of this the test results do not provide a basis for predicting either operational performance or life. Loss of media charge or shedding of particles or fibres can also adversely affect efficiency.

7 Test rig and equipment

7.1 Test conditions

Room air or outdoor air may be used as the test air source. Relative humidity shall be less than 75 %. The exhaust flow may be discharged outdoors, indoors or recirculated. Requirements of certain measuring equipment may impose limits on the temperature of the test air.

Filtration of the exhaust flow is recommended when test aerosol and loading dust may be present.

7.2 Test rig

The test rig (see Figure 1) consists of several square duct sections with 610 mm × 610 mm nominal inner dimensions except for the section where the filter is installed. This section has nominal inner dimensions between 616 mm and 622 mm. The length of this duct section shall be at least 1,1 times the length of the filter, with a minimum length of 1 m.

The duct material shall be electrically conductive and electrically grounded, have a smooth interior finish and be sufficiently rigid to maintain its shape at the operating pressure. Smaller parts of the test duct could be made in glass or plastic to see the filter and equipment. Provision of windows to allow monitoring of test progress is desirable.

HEPA filters may be placed upstream of section 1, in which the aerosol for efficiency testing is dispersed and mixed to create a uniform concentration upstream the filter.

Section 2 includes in the upstream section the mixing orifice (10) in the centre of which the dust feeder discharge nozzle is located. Downstream of the dust feeder is a perforated plate (11) intended to achieve a uniform dust distribution. In the last third of this duct is the upstream aerosol sampling head. For arrestance tests, this sampling head shall be blanked off or removed.

To avoid turbulence, the mixing orifice and the perforated plate should be removed during the efficiency test. To avoid systematic error, removal of these items during pressure drop measurements is recommended.

Section 5 may be used for both efficiency and arrestance measurements and is fitted with a final filter for the arrestance test and with the downstream sampling head for the efficiency test. Section 5 could also be duplicated, allowing one part to be used for arrestance test and the other for the efficiency test.

The test rig can be operated either in both negative or positive pressure. In the case of positive pressure operation (i.e. the fan upstream the test rig), the test aerosol and loading dust could leak into the laboratory, while at negative pressure particles could leak into the test system and affect the number of measured particles.

The dimensions of the test rig and the position of the pressure taps are shown in Figure 2.

The pressure drop of the tested filter shall be measured using static pressure taps located as shown in Figure 2. Pressure taps shall be provided at four points over the periphery of the duct and connected together by a ring line.

Section 6 is fitted with a standardised air flow measuring device. If an alternative air flow measurement device is used, this section can be shortened.

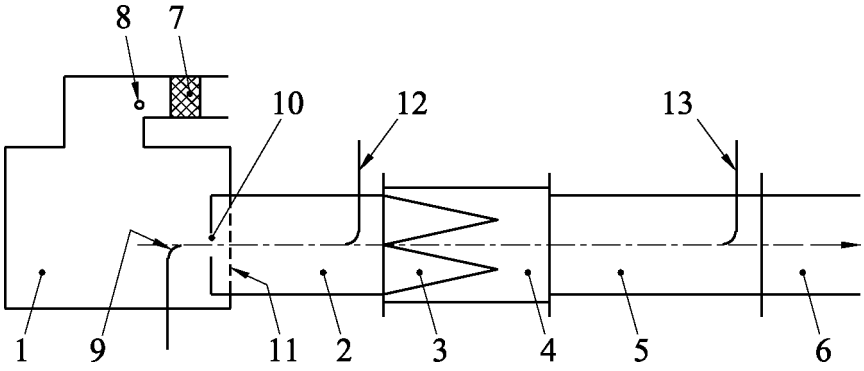

Key

1 Duct section of the test rig
2 Duct section of the test rig
3 Filter to be tested
4 Duct section including the filter to be tested
5 Duct section of the test rig
6 Duct section of the test rig
7 HEPA-Filter (at least H13)
8 Inlet point for DEHS particles
9 Dust injection nozzle
10 Mixing orifice
11 Perforated plate
12 Upstream sampling head
13 Downstream sampling head

Figure 1 — Schematic diagram of the test rig

Dimensions in millimetres

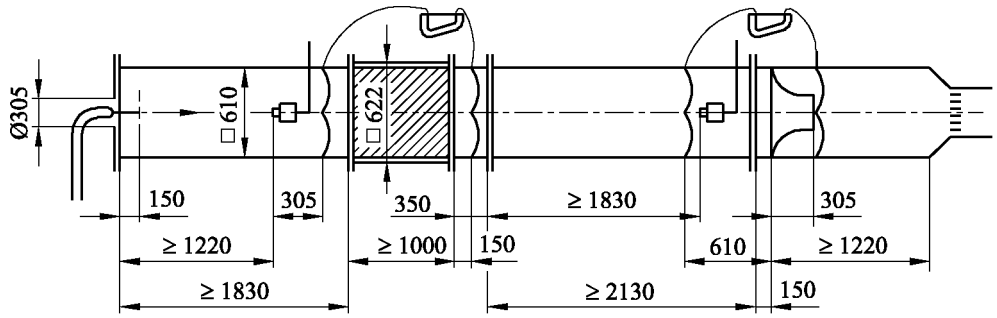

Figure 2 — Dimensions of the test rig

Dimensions in millimetres

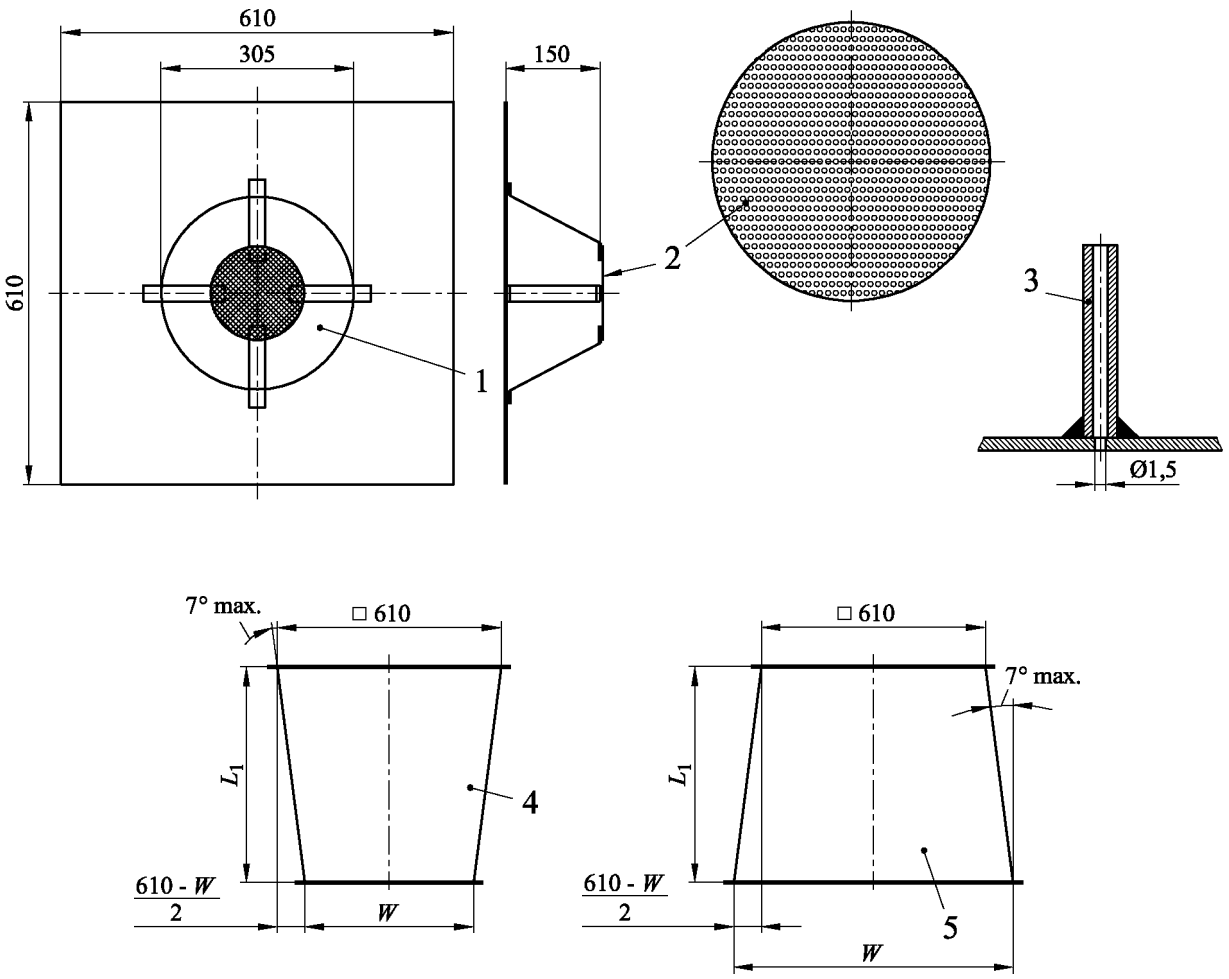

Key

1 Mixing orifice
2 Perforated plate with Ø 152 mm ± 2 mm and 40 % open area
3 Pressure tap
4 Transition duct - test filter smaller than duct
5 Transition duct - test filter larger than duct

Figure 3 — Details of test duct components

7.3 Aerosol generation – DEHS Test Aerosol

The test aerosol described shall consist of untreated and undiluted DEHS. Any other aerosol proven to give equivalent performance may be used. Test aerosol of DEHS (DiEthylHexylSebacate) produced by a Laskin nozzle is widely used in performance testing of HEPA and ULPA filters.

Figure 4 gives an example of a system for generating the aerosol. It consists of a small container with DEHS liquid and a Laskin nozzle. The aerosol is generated by feeding compressed particle-free air through the Laskin nozzle. The atomised droplets are then directly introduced into the test rig. The pressure and air flow to the nozzle are varied according to the test flow and the required aerosol concentration. For a test flow of 0,944 m^3/s the pressure is about 17 kPa, corresponding to an air flow of about 0,39 dm^3/s (1,4 m^3/h) through the nozzle.

Any other generator capable of producing uncharged droplets in sufficient concentrations in the size range of 0,2 µm to 3,0 µm can be used.

Before testing, regulate the upstream concentration to reach steady state and to have a concentration below the coincidence level of the particle counter.

Dimensions in millimetres

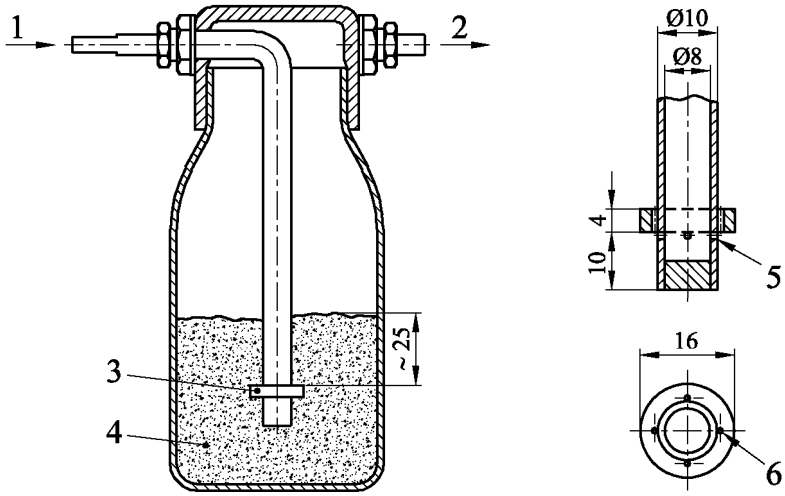

Key

1 Particle-free air (pressure about 17 kPa)
2 Aerosol to test rig
3 Laskin nozzle
4 Test aerosol (for instance DEHS)
5 Four ∅ 1,0 mm holes 90º apart top edge of holes and just touching the bottom of the collar
6 Four ∅ 2,0 mm holes next to tube in line with radial holes

Figure 4 — DEHS particle generation system

7.4 Aerosol sampling system

Two rigid sample lines of equal length and equivalent geometry (bends and straight lengths) shall connect the upstream and downstream sampling heads to the particle counter (see Figure 5). The sample tubes shall be electrically conducting or have a high dielectric constant and have a smooth inside surface (steel, tygon, etc).

Tapered sampling probes are placed in the centre of the upstream and downstream measuring sections. The sampling heads shall be centrally located with the inlet tip facing the inlet of the rig parallel to the air flow. The sampling shall be isokinetic within 10 % at a test flow rate of 0,944 m^3/s. Isokinetic sampling is also recommended at other test flows.

Three one-way valves make it possible to sample the aerosol upstream or downstream of the filter under test, or to have a "blank" suction through a HEPA filter. These valves shall be of a straight-through design. Due to possible particle losses from the sampling system, the first measurement after a valve is switched should be ignored.

The flow rate can be maintained by the pump in the counter in the case of a particle counter with a high flow rate (e.g. 0,47 dm^3/s) or by an auxiliary pump in the case of a counter with smaller sample flow rates. The exhaust line shall then be fitted with an isokinetic sampling nozzle directly connected to the particle counter to achieve isokinetic conditions within a tolerance of ± 10 %.

Particle losses will occur in the test duct, aerosol transport lines and particle counter. Minimisation of particle losses is desirable because a smaller number of counted particles will mean larger statistical errors and thus less accurate results. The influence of particle losses on the result is minimised if the upstream and downstream sampling losses are made as near equal as possible.

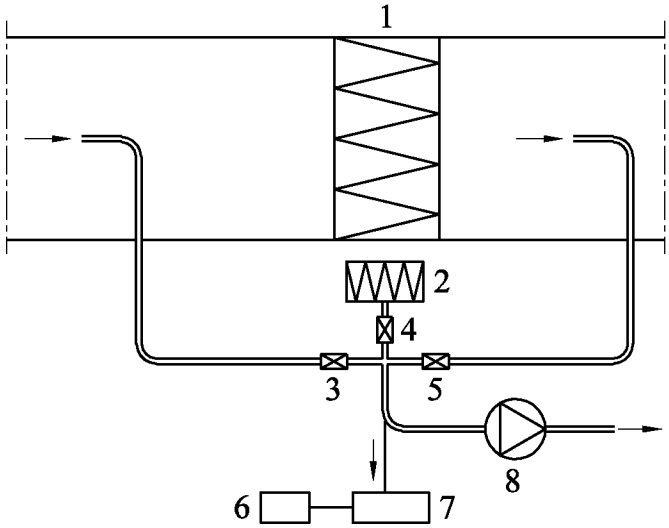

Key

1 Filter
2 HEPA filter (clean air)
3 Valve, upstream
4 Valve, clean air
5 Valve, downstream
6 Computer
7 Particle counter
8 Pump

Figure 5 — Schematic diagram of the aerosol sampling system

7.5 Flow measurement

Flow measurement shall be made by standardised flow measuring devices in accordance with EN ISO 5167-1. Examples are orifice plates, nozzles, Venturi tubes, etc.

The uncertainty of measurement shall not exceed 5 % of the measured value at 95 % confidence level.

7.6 Particle counter

This method requires the use of an optical particle counter (OPC) having a particle size range of at least 0,2 µm to 3,0 µm. The counting efficiency of the OPC shall be ≥ 50 % for 0,2 µm particles. The size range should be divided into at least five size classes, the boundaries of which should be approximately equidistant on a logarithmic scale.

Clause 8 contains further information and details about the calibration and operation of OPCs, which have to be used for this test.

7.7 Differential pressure measuring equipment

Measurements of pressure drop shall be taken between measuring points located in the duct wall as shown in Figure 2. Each measuring point shall comprise four interconnected static taps equally distributed around the periphery of the duct cross section.

The pressure measuring equipment used shall be capable of measuring pressure differences with an accuracy of ± 2 Pa in the range of 0 Pa to 70 Pa. Above 70 Pa, the accuracy shall be ± 3 % of the measured value.

7.8 Dust feeder

Any dust feeder can be chosen as long as it gives the same test result as the dust feeder described below. The purpose of the dust feeder is to supply the synthetic dust to the filter under test at a constant rate over the test

period. A certain mass of dust previously weighed is loaded into the mobile dust feeder tray. The tray moves at a uniform speed and the dust is taken up by a paddle wheel and carried to the slot of the dust pickup tube of the ejector.

The ejector disperses the dust with compressed air and directs it into the test rig through the dust feed tube. The dust injection nozzle shall be positioned at the entrance of duct section 2 in Figure 1 and be collinear with the duct centre line.

The compressed air shall be dry, clean and free from oil.

The general design of the dust feeder and its critical dimensions are given in Figure 6 and Figure 7. The angle between the dust pickup tube and dust feed trough is 90 o in the figure but could be less in real application.

Backflow of air through the pickup tube from the positive duct pressure shall be prevented when the feeder is not in use.

The degree of dust dispersion by the feeder is dependent on the characteristics of the compressed air, the geometry of the aspirator assembly and the rate of air flow through the aspirator. The aspirator venturi is subject to wear from the aspirated dust and will become enlarged with use. Its dimension shall be monitored periodically to ensure that the tolerances shown in Figure 7 are met.

The gauge pressure on the air line to the Venturi corresponding to an air flow of the dust-feeder pipe of 6,8 l/s ± 0,2 l/s shall be measured periodically for different pressure drops in the duct. See 8.11.

Dimensions in millimetres

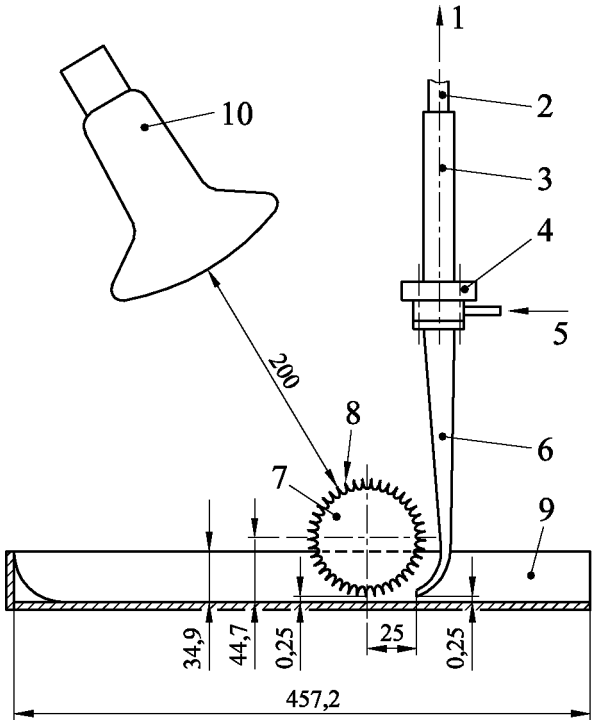

Key

1 Dust feed tube (to inlet of test duct)
2 Thin-wall galvanised conduit
3 Venturi ejector
4 Ejector
5 Dry compressed air feed
6 Dust pickup tube (0,25 mm from dust feed tray)
7 Dust paddle wheel. Ø 88,9 mm (outer dimension), 114,3 mm long with 60 teeth 5 mm deep
8 Teeth in paddle wheel (60 teeth)
9 Dust feed tray
10 150 W infrared-reflector lamp

Figure 6 — Critical dimensions of dust feeder assembly

Dimensions in millimetres

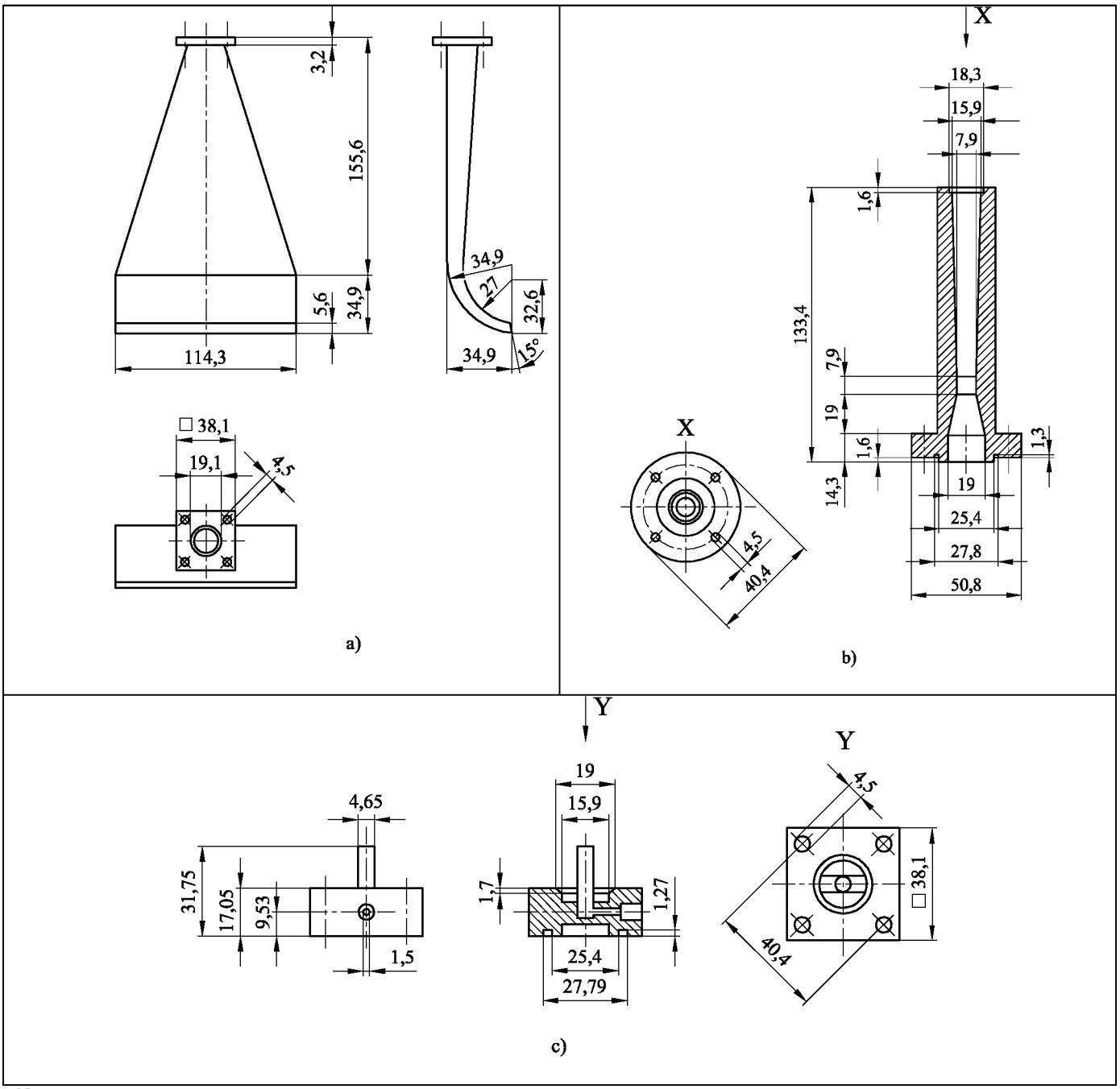

Key

a) Dust pickup tube
b) Ejector
c) Venturi ejector

Tolerances:

— for integers: 0,8 mm

— for decimals: 0,03 mm

Figure 7 — Ejector, Venturi ejector and-pickup details for the dust feeder

8 Qualification of test rig and apparatus

8.1 Air velocity uniformity in the test duct

The uniformity of the air velocity in the test duct shall be determined by measuring the velocity at nine points located as in Figure 8, immediately upstream the test filter section without filter and the mixing device. Measurements shall be made with an instrument having an accuracy of ± 10 % with a resolution of minimum 0,05 m/s.

Measurements shall be conducted at 0,25 m^3/s, 1,0 m^3/s and 1,5 m^3/s. It is important that no significant disturbance of the air flow occurs (from instrument, operator, etc.) when measuring the velocities.

For each measurement, a sample time of at least 15 seconds shall be used. The average of three measurements shall be calculated for each of the nine points and the mean and the standard deviation shall be calculated from these nine values.

The coefficient of variation CV shall be calculated as follows:

$$CV = \delta / mean \tag{1}$$

where

δ is the standard deviation of the nine measuring points;

$mean$ is the mean value of the nine measuring points.

The CV shall be less than 10 % at each air flow.

8.2 Aerosol uniformity in the test duct

The uniformity of the challenge aerosol in the test duct shall be determined by measurements at nine points immediately upstream the filter. See Figure 8. The mixing device should be removed during qualification tests. The measurement can be done by using a single probe which can be repositioned. The probe shall be of the same shape as the probe used in the efficiency test and have an appropriate entrance diameter to obtain isokinetic sampling within 10 % at 0,944 m^3/s. The same probe and sample flow shall be used at test duct flows 0,25 m^3/s, 1,0 m^3/s and 1,5 m^3/s. The sampling line shall be as short as possible to minimise sampling losses and shall also be of the same diameter as used in the efficiency test.

The aerosol concentration shall be measured with a particle counter meeting the specification in this standard. The number of particles counted in a specified size range in a single measurement should be > 500 in order to reduce the statistical error.

Dimensions in millimetres

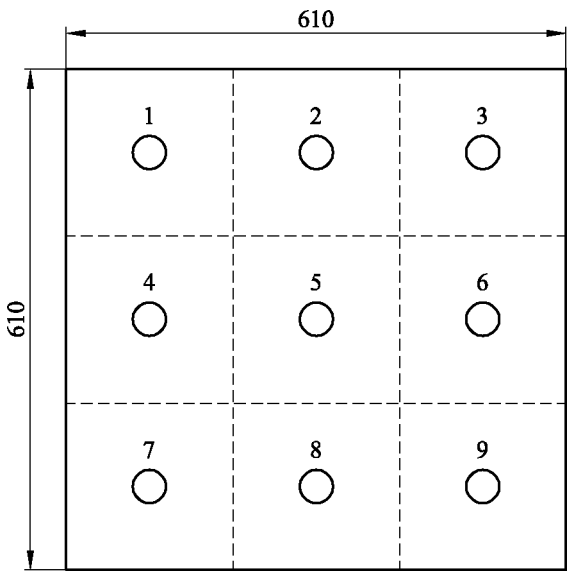

Figure 8 — Air velocity and aerosol uniformity
Sampling points for measuring uniformity of air velocity and aerosol dispersion

A sample is taken successively at each measuring point. This procedure shall be repeated until five samples from each measuring point are obtained. The five values for each point shall be averaged for all size ranges of the particle counter and the coefficient of variation CV_i shall be calculated for each for size range "i" as follows:

$$CV_i = \delta_i / mean_i \quad (2)$$

where

δ_i is the standard deviation (of the nine measuring points) for size range "i";

$mean_i$ is the mean value of the nine measuring points for size range "i".

The CV_i shall be less than 15 % for 0,25 m^3/s, 1,0 m^3/s and 1,5 m^3/s.

8.3 Particle counter sizing accuracy

Optical particle counters (OPCs) measure the particle concentration and the equivalent optical particle size. The indicated particle size is strongly dependent on the calibration of the OPC.

To avoid effects caused by different aerodynamic, optical and electronic systems of various types of OPCs, measurements both upstream and downstream of the filter shall be made with the same instrument.

The OPC shall be calibrated prior to initial system start-up and thereafter in regular intervals of not longer than one year and shall have a valid calibration certificate. The calibration of the OPC shall be done by the OPC manufacturer or any similarly qualified organisation according to established standardised procedures (e.g. IEST-RP-CC014; ISO 21501-1; ISO 21501-4) with spherical, isotropic particles of polystyrene latex (PSL) in single dispersion, having a refractive index of 1,59. The calibration has to be performed for at least 3 channels of the OPC, distributed over the measuring range of 0,2 µm to 3,0 µm, including the channels containing 0,2 µm and 3,0 µm.

A good indication of the OPC calibration may be obtained by checking upstream distribution of the test aerosol at each test. A quick calibration check, performed frequently according to the recommendation of the particle counter manufacturer, is strongly recommended. In this calibration check it is sufficient to verify that PSL particles of varying size appear in the corresponding size class(es) of the OPC to which they belong. Checks with PSL particles at the low and the high end of the OPC´s size range are especially meaningful.

The sampling flow rate is the volumetric flow rate through the Optical particle counter (OPC). Any error in the volume flow will affect the reported particle number concentration with a proportional relationship. The error in the sampling flow rate shall be within ± 5 %, in compliance with one established standardised procedure (e.g. IEST-RP-CC014).

8.4 Particle counter zero test

The count rate shall be verified to have less than 10 total counts per minute in the 0,2 µm to 3,0 µm size range when operating with a HEPA or ULPA filter directly attached to the instrument's inlet. This also includes the sampling system.

8.5 Particle counter overload test

OPC´s may underestimate particle concentrations if their concentration limit CL is exceeded. Therefore it is necessary to know the CL of the OPC being used. The maximum aerosol concentration used in the tests should then be kept sufficiently below the CL, so that the counting error resulting from coincidence does not exceed 5 %. Operating OPCs above their CL will cause efficiency results to be lower then they really are.

If the upstream concentration in the test duct cannot be reduced, a dilution system may be used to reduce the aerosol concentrations below the OPC´s CL. It is then necessary to take upstream and downstream samples via the dilution system in order to eliminate errors arising from uncertainty in the dilution factor's value.

1) Either one of the two following procedures may be used to determine whether the data values are influenced by the efficiency of a reference filter shall be measured at different concentrations. At a concentration above the OPC`s CL, efficiency starts to decrease;

2) An upstream particle concentration distribution shall be measured. Afterward, the concentration shall be uniformly reduced or diluted (this can be done by a known or an unknown factor) and the measurement of the particle concentration distribution repeated. If the shape of the latter particle size distribution curve shifts towards smaller particles, this is a clear sign that the former concentration was higher than the OPC`s CL. If the factor for concentration reduction or dilution is known, this factor should be found in each size class of the OPC, between the two concentration measurements.

Concentration reduction may be achieved by increasing the air flow through the filter or by reducing the aerosol generator's output.

Concentration dilution may be achieved by inserting a dilution system in the sampling line of the OPC.

8.6 100 % efficiency test

The purpose of this test is to ensure that the test duct and sampling system are capable of providing a 100 % efficiency measurement. The test shall be made using a HEPA or ULPA filter as the test device. The normal test procedure for determination of efficiency is used. The test shall be performed at an air flow of 0,944 m^3/s. The efficiency shall be greater than 99 % for all particle sizes.

8.7 Zero % efficiency test

The zero % efficiency test is a test of the accuracy of the overall duct, sampling system, measurement and aerosol generation systems. The test shall be performed as a normal efficiency test but with no test filter installed. The test air flow shall be 0,944 m^3/s. Two tests shall be done according to standard test procedure and the calculated zero efficiency shall meet the following criteria:

— 0 % ± 3 % for particle sizes equal or less than 1,0 µm;

— 0 % ± 7 % for particle sizes larger than 1,0 µm.

The total number of counted particles for each size should be > 500 in order to limit the statistical error.

8.8 Aerosol generator response time

The time interval for the aerosol concentration to go from background level to steady state test level shall be measured. This is to ensure that sufficient time is allowed for the concentration to stabilise before performing any tests.

Start the aerosol generator and record the time interval for the concentration to stabilise to a steady state condition. The time interval shall be used as a minimum delay time before starting a test sequence according to this standard.

8.9 Pressure equipment calibration

All equipment for pressure drop readings shall be calibrated according to Table 2.

8.10 Pressure drop checking

This test is to verify that leaks in the equipment for pressure drop readings, instrument lines, etc. do not significantly affect the accuracy of the measurements of air flow or pressure drop. The test may be made by calibrated devices or by the system described below.

Seal the pressure sample points in the test duct carefully. Disconnect the pressure drop meter. Pressurise the tubes with a constant negative pressure of 5 000 Pa. Check all sampling lines in this manner (see Figure 9). No changes in pressure are allowed.

Pressurise the pressure drop measuring equipment at the maximum permitted pressure according to the instrument specification. The procedure shall be carried out sequentially on both positive and negative pressure lines. No changes in pressure are permitted on either inlet.

As an addition, a perforated plate (or other reference) having known pressure drops at 0,5 m^3/s, 0,75 m^3/s, 1,0 m^3/s and 1,5 m^3/s may be used for periodic checks on the pressure drop measurement system.

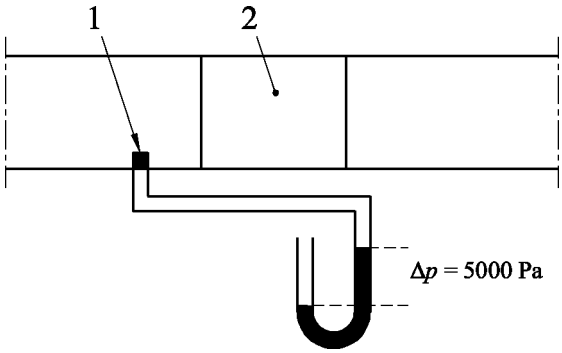

Key

1 Sealed pressure inlet
2 Test device section
a) Δp = 5 000 Pa

Figure 9 — Pressure line test

8.11 Dust feeder air flow rate

The purpose of this test is to verify that the air flow rate for the dust feeder is correct.

The aspirator Venturi is subject to wear from the dust and compressed air and will thereby become enlarged. It is therefore important periodically to monitor the air flow rate from the dust feeder. The flow shall be (6,8 ± 0,2) l/s. This air flow is determined as in Figure 10.

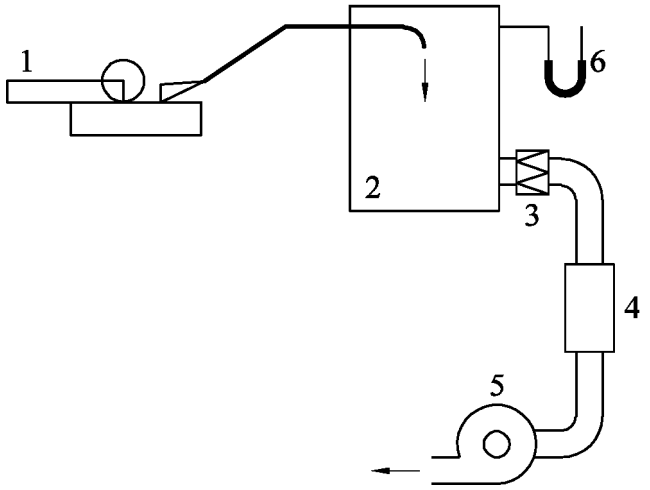

Key

1 Dust feeder
2 Plenum with minimum volume of 0,25 m^3
3 HEPA filter
4 Flow metering device
5 Fan
6 Pressure drop measurement device
[a] The differential pressure should be zero.

Figure 10 — Dust feeder air flow rate

8.12 Summary of qualification requirements

Table 2 — Summary of qualification requirements

Parameter	Subclause	Requirement
Air velocity uniformity	8.1	$CV < 10$ %
Aerosol uniformity	8.2	$CV < 15$ %
Particle counter sizing accuracy	8.3	According to manufacturers valid calibration certificate
Particle counter - overload test	8.5	No overloading
Particle counter zero	8.4	Less than 10 counts per minute in size range 0,2 µm to 3,0 µm
100 % Efficiency test	8.6	> 99 %
0 % Efficiency test	8.7	Sizes ≤ 1,0 µm: ± 3% Sizes > 1,0 µm: ± 7%
Aerosol generator response time	8.8	As measured
Manometer calibration	8.9	Size range: 0 Pa to 70 Pa: ± 2 Pa > 70 Pa: ± 3 % of the measured value
Pressure drop test	8.10	No detectable leaks
Dust feeder air flow rate	8.11	(6,8 ± 0,2) l/s
NOTE CV = Coefficient of variation.		

8.13 Apparatus maintenance

Table 3— Frequency of maintenance

Maintenance item	Subclause	Each test	Monthly	Bi-annually	Annually	After any change that might alter performance
TEST DUCT						
Air velocity uniformity	8.1					X
Aerosol uniformity	8.2					X
100 % efficiency test	8.6		X			X
0 % efficiency test	8.7		X			X
Pressure drop test	8.10			X		X
INSTRUMENT						
Aerosol generator response time	8.8			X		X
Manometer calibration	8.9				X	X
Particle counter - sizing accuracy	8.3				X	X
Particle counter - overload test	8.5					X
Particle counter - zero test	8.4	X				X
Dust feeder air flow rate	8.11			X		X
NOTE Regular cleaning of all equipment shall be undertaken so that the performance of the test system is maintained.						

9 Test materials

9.1 Test air - cleanliness, temperature and humidity

Room air or outdoor air is used as the test air source. In the efficiency tests, the air is filtered with HEPA filters to obtain a test air free of background particles. The test conditions shall be in accordance with Clause 7. The exhaust flow may be discharged outdoors, indoors or recirculated. Filtration of the exhaust flow is recommended when test aerosol and loading dust may be present.

9.2 Test aerosol

Test aerosol of DEHS (DiEthylHexylSebacate) produced by a Laskin nozzle is widely used in the testing of HEPA and ULPA filters. DEHS is the same as DES Di (2-ethylhexyl) Sebacate or Bis (2-ethylhexyl) Sebacate.

Any generator capable of producing droplets in sufficient concentrations in the size range of 0,2 µm to 3,0 µm can be used apart from the Laskin generator. Undiluted DEHS liquid shall be used and the DEHS aerosol shall not be treated.

DEHS/DES/DOS – formula:

$C_{26}H_{50}O_4$ or $CH_3(CH_2)_3CH(C_2H_5)CH_2OOC(CH_2)_8COOCH_2CH(C_2H_5)(CH_2)3CH_3$

DEHS properties:

Density 912 kg/m^3

Melting point	225 K
Boiling point	529 K
Flash point	> 473 K
Vapour pressure	1,9 µPa at 273 K
Refractive index	1,450 at 600 nm wavelength
Dynamic viscosity	0,022 kg/ms to 0,024 kg/ms
CAS number	122-62-3

9.3 Loading dust

The synthetic loading dust is specified in ANSI/ASHRAE 52.2 and has the following composition:

72 % by weight test dust "fine" ISO 12103-A2;

23 % by weight carbon black;

5 % by weight cotton linters.

Test dust "fine" according to ISO 12103-1, identified as ISO 12103-A2, consists mainly of silica particles with the size distribution given in Table 4.

Table 4— Size distribution of ISO 12103-A2 loading dust (ISO 12103-1:1997)

Size µm	Volume larger than size %
1	96,5 - 97,5
2	87,5 - 89,5
3	78,0 - 81,5
4	70,5 - 74,5
5	64 - 69
7	54 - 59
10	46 - 50
20	26 - 30
40	9 - 12
80	0 - 0,5

9.4 Final filter

The final filter captures any loading dust that passes through the tested filter during the dust loading procedure. The final filter shall retain at least 98 % of the loading dust and not gain or lose more than one gram e.g. as a result of humidity variations met during one test cycle.

The final filter design is optional; to meet the retention efficiency (arrestance) requirement of > 98 %, a unit should possess an initial efficiency of > 75 % with respect to 0,4 µm DEHS particles.

10 Test procedure for the filter

10.1 Preparation of filter to be tested

The filter shall be mounted in accordance with the manufacturer's recommendations and after equilibration with the test air weighed to the nearest gram. Devices requiring external accessories shall be operated during the test with accessories having characteristics equivalent to those used in actual practice. The filter, including any normal mounting frame, shall be sealed into duct in a manner that prevents leakages. The tightness shall be checked by visual inspection and no visible leaks are acceptable. If for any reason, dimensions do not allow testing of a filter under standard test conditions, assembly of two or more filters of the same type or model is permitted, provided no leaks occur in the resulting filter. The operating conditions of such accessory equipment shall be recorded.

10.2 Initial pressure drop

The value of the initial pressure drop shall be recorded at 50 %, 75 %, 100 % and 125 % of the rated air flow to establish a curve of pressure drop as a function of the air flow rate. The pressure drop readings shall be corrected to an air density of 1,20 kg/m^3 (see Annex C).

10.3 Initial efficiency

10.3.1 General

The discharged efficiency of media shall be tested according to Clause 11 (Test method for discharging of filter material), while the filter itself is tested according to this chapter.

10.3.2 Efficiency measurement

The efficiency *E* for a given particle size range (between two particle diameters) shall be calculated as follows:

$$E = \left(1 - \frac{n_i}{N_i}\right) 100 \tag{3}$$

where

n_i is the number of particles in the size range “i” downstream of filter;

N_i is the number of particles in the size range “i” upstream of filter.

The initial efficiency curve versus the size range diameters shall be plotted in a diagram. The size range diameter or the mean diameter d_i is the geometric average of the lower and upper border diameters in the size range “i”:

$$d_i = \sqrt{d_l \times d_u} \tag{4}$$

where

d_l is the lower border diameter in the size range;

d_u is the upper border diameter in the size range.

The determination of the initial efficiency is done at the test air flow rate and the aerosol generator output is adjusted to generate a stable concentration of aerosol within the OPC coincidence level requirements and such that the downstream count rate is sufficient for a statistically valid result within an acceptable time scale.

The efficiency measurement is done by a series of at least 13 counts of a minimum 20 seconds conducted successively upstream and downstream of the filter under test and with a purge before each count, or with one intervening sample upstream or downstream without counting, in order to stabilise the concentration of particles in the transfer lines.

The counting cycle for size range "i" will then be as in Table 5.

Table 5 — Counting cycle for a size range "i"

Count no.	1	2	3	4	5	6	7	8	9	10	11	12	13
Upstream	$N_{1,i}$		$N_{2,i}$		$N_{3,i}$		$N_{4,i}$		$N_{5,i}$		$N_{6,i}$		$N_{7,i}$
Downstream		$n_{1,i}$		$n_{2,i}$		$n_{3,i}$		$n_{4,i}$		$n_{5,i}$		$n_{6,i}$	

The first single efficiency for size range "i" shall be calculated as follows:

$$E_{1,i} = \left(1 - \frac{n_{1,i}}{\frac{N_{1,i} + N_{2,i}}{2}}\right) 100 \tag{5}$$

The 13 measurements give six single efficiency ($E_{1,i}$,..., $E_{6,i}$) results. The initial average efficiency E_i shall be calculated for the size range "i" as follows:

$$E_i = \left(E_{1,i} + \ldots + E_{6,i}\right)/6 \tag{6}$$

where

E_i is the initial average efficiency of the filter for size range "i".

10.4 Dust loading

10.4.1 Dust loading procedure

The filter is progressively loaded with the standardised test dust and the consequent changes in pressure drop and efficiency are determined. Dust increments are weighed to ± 0,1 g and placed in the dust tray. The dust is fed to the filter at a concentration of 70 mg/m^3 until each pressure drop step value is attained. The arrestance and efficiency is determined after each incremental dust addition. For filters known to have an average efficiency of < 40 % only the arrestance need be determined.

Before stopping the dust feeding, brush whatever dust remains in the feeder tray to the dust pickup tube so that it is entrained in the duct air flow. Vibrate or rap the dust feeder tube for 30 seconds. The dust fed to the filter could also be estimated by weighing the remaining dust in the feeder. With the test air flow on, re-entrain any synthetic dust in the duct upstream of the filter by the use of a compressed air jet directed obliquely away from the tested filter.

Stop the test and reweigh the final filter (to at least 0,5 g accuracy) to determine the amount of synthetic dust collected and calculate the arrestance. Any dust deposited in the duct between the filter and the final filter should be collected with a fine brush and included in the final filter weight.

Initial efficiency and pressure drop are determined before dust loading, while efficiency, pressure drop and arrestance shall be measured after 30 g dust and after at least four more approximately equal dust increments up to the final test pressure drop. The first 30 g dust will give the initial arrestance and the additional dust increments should give a smooth curve of efficiency and/or arrestance versus dust loading up to the final test pressure drop.

Table 6 describes the parameters to be determined during the dust loading procedure.

Table 6 — Performance values to measure or calculate after each dust loading step

Stage	Parameter to be determined			
	Efficiency	Arrestance	Test dust capacity	Pressure drop
Initial, before dust loading	YES	NO	NO	YES
After 30 g dust (the first loading to give initial arrestance)	YES	YES	NO	YES
At the end of each intermediate increment	YES	YES	NO	YES
After the last increment (final test pressure drop)	YES	YES	YES	YES

The dust increments could be difficult to estimate and, when applicable dust loading approximately to 100 Pa, 150 Pa, 250 Pa and 450 Pa pressure drop will give a smooth curve. However, a filter with low initial pressure loss, or a filter with low increase of pressure versus loading dust, requires one or more measuring points in the beginning of the dust loading procedure, while other filters may need an extra measuring point at the end of the dust loading procedure to give an even distribution of measuring points.

NOTE Dust increments should be sized to give a minimum of four evenly distributed measuring points along the dust loading/pressure drop curves. Additional measuring points may be required in circumstances where the appropriate masses of the dust increments are difficult to estimate.

Values of test dust capacity, average efficiency and arrestance at the specified final test pressure drop values are determined by linear interpolation from the appropriate graphs.

10.4.2 Arrestance

The arrestance shall be determined after each dust loading stage.

After reaching the next pressure drop level the previously weighed final filter is removed from the test rig and reweighed. The weight increase indicates the mass of dust that has passed the test filter. The arrestance A_j for the dust loading step "j" shall be calculated as follows:

$$A_j = (1 - m_j/M_j)\,100\,\% \tag{7}$$

where

m_j is the mass of dust passing the filter (the mass gain of final filter Δm_{ff} and the dust after the device m_d) at the dust loading phase "j";

M_j is the mass of dust fed (dust increment Δm) during the dust loading phase "j".

The test is stopped if the arrestance is lower than 75 % of the maximum arrestance, or if two values are lower than 85 % of the maximum value. The initial arrestance is calculated after the first 30 g loading dust.

An average arrestance is calculated from at least five single values of the arrestance. The average dust arrestance A_m shall be calculated as follows:

$$A_m = (1/M) \times [M_1 \times A_1 + M_2 \times A_2 + \ldots + M_n \times A_n] \tag{8}$$

where

$M = M_1 + M_2 + \ldots + M_n$ is the total mass of dust fed;

$M_1, M_2, \ldots M_n$ are dust masses successively fed to reach the final test pressure drops $\Delta p_1, \Delta p_2 \ldots \Delta p_n$.

Arrestance values above 99 % should be reported as > 99 %.

In plotting a continuous curve of arrestance against dust fed, the curve shall be drawn through arrestance values plotted at the mid-point of their associated weight increments.

10.4.3 Efficiency

The efficiency shall be determined initially and, if possible, immediately after each stage of dust loading. All sources of leakage permitting by-passing of the filter shall be eliminated before testing.

After each dust loading stage, the filter shall be air-swept for five minutes to reduce the emission of particles "released" from the partly loaded filter and from inside the duct system. The releasing, re-entrainment or shedding of particles after five minutes is included in the measurement and will influence the efficiency determination.

The efficiency measurement is done in the same way as for initial efficiency (see 10.3.2) by a series of at least 13 counts of a minimum of 20 seconds conducted successively upstream and downstream of the filter under test. Each count shall be preceded by an air purge or with an uncounted intervening sample to stabilise the concentration of particles in the transfer lines.

The average efficiency after each loading stage shall be calculated for the size range "i" as follows:

$$E_{i,j} = \left(E_{1,i} + \ldots + E_{6,i}\right)/6 \tag{9}$$

where

$E_{1,i}$; … ; $E_{6,i}$ are the single efficiencies for size range "i" after the dust loading stage;

$E_{i,j}$ is the average efficiency for size range "i" after the loading stage "j".

10.4.4 Average efficiency

The average efficiency is an efficiency averaged to take account of the effects of progressive dust loading.

For a series of "n" dust loading phases, the average efficiency is given by the following formula:

$$E_{m,i} = \frac{1}{M}\sum_{j=1}^{n}\left(\frac{E_{i,(j-1)} + E_{i,j}}{2} \times M_j\right) \tag{10}$$

where

$E_{m,i}$ is the average efficiency for the particle size range "i" for all dust loading stages;

$E_{i,j}$ is the average efficiency for size range "i" after the dust loading phase "j";

M_j is the amount of dust fed during the dust loading phase "j";

M is $\sum_{j=1}^{n} M_j$;

n is the number of dust loading phases.

10.4.5 Test dust capacity

The test dust capacity for a given final test pressure drop is calculated by multiplying the total mass of dust fed (corrected for the losses upstream of the filter) by the average arrestance.

11 Test method for discharging of filter material

11.1 General

This procedure is used to determine whether the filter efficiency is dependent on the electrostatic removal mechanism and to provide quantitative information about the importance of the electrostatic removal. This is accomplished by measuring the removal efficiency of an untreated filter material and the corresponding efficiency after the effect of the electrostatic removal mechanism has been eliminated or inhibited.

11.2 Equipment

The described procedure is based on a Standardized treatment with isopropanol (IPA) to evaluate electrostatic influence on filter efficiency.

The isopropanol test is made by first measuring the efficiency of untreated media samples. Next, the samples are immersed in isopropanol (>99,5 % technical grade). If IPA is reused the IPA purity must remain above 99,5 %. After filter samples have been wetted by the isopropanol, they are placed on a flat inert surface in a fume cupboard for drying. After the drying period of 24 hours, the efficiency measurements are repeated. To verify that sample is free from residual IPA the mass of the untreated and the dried samples are compared.

The principle of the filter material test equipment is shown in Figure 11. This system consists of a test duct, a flow meter, a flow control valve, a (downstream) sampling tube and a manometer. The filter sample to be tested is fixed to the test tube by means of a flange. The test tube also includes a mixing section, which ensures a representative sampling downstream of the filter. The sampling tubes are connected to the sampling system of the particle size analyser. Air and test aerosol could be taken from the main duct system, which means that the normal aerosol generation system, for testing the filter, can be used.

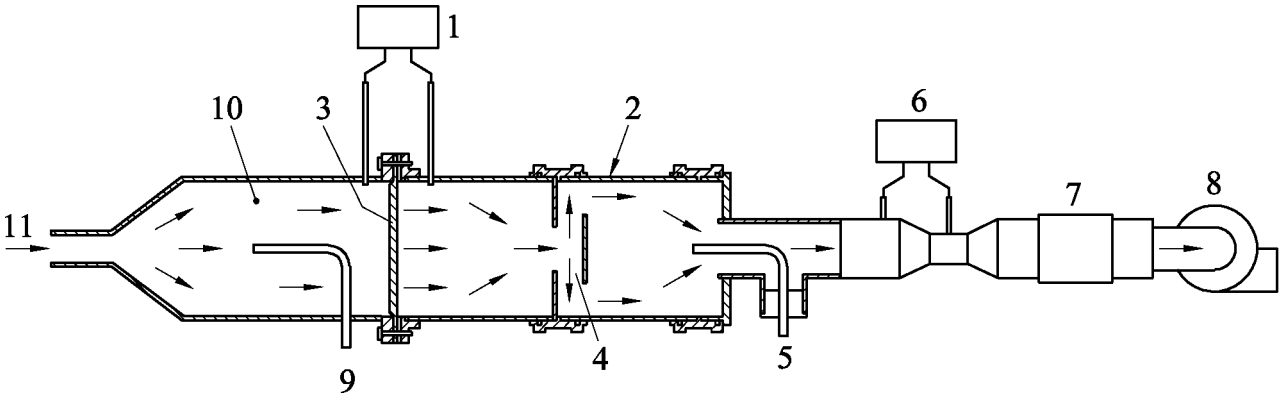

Key

1 Manometer
2 Test duct
3 Filter sample
4 Mixing section
5 Downstream sampling
6 Flow meter
7 Flow control
8 Fan
9 Upstream sampling
10 Upstream duct
11 Aerosol

Figure 11 — Filter material test equipment

The isopropanol treatment is made using the system shown in Figure 12. This system includes a vessel for the technical grade isopropanol. The system also includes flat surfaces on which filter samples are placed for drying. The drying of the filter samples should take place in a laboratory fume cupboard.

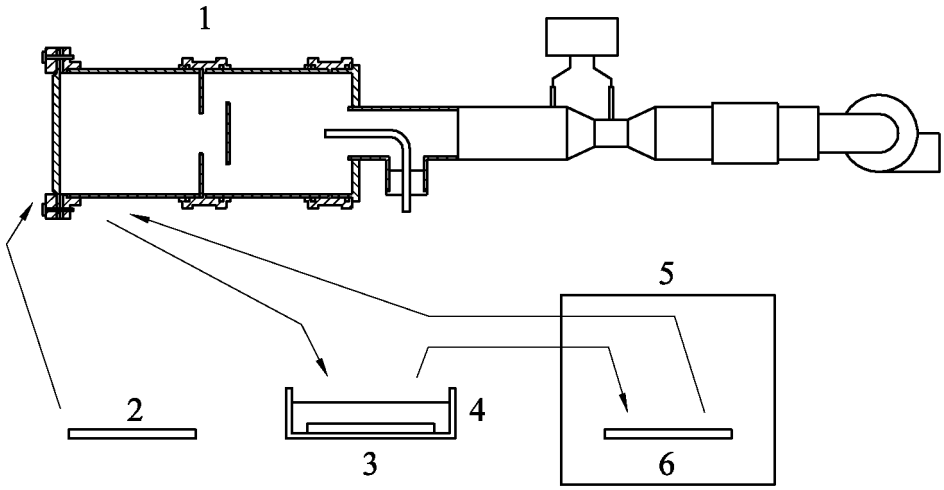

Key
1 Efficiency measurement
2 Filter sample
3 Isopropanol treatment
4 Isopropanol vessel
5 Fume cupboard
6 Drying

Figure 12 — Principle of the isopropanol test system

11.3 Preparation of test samples

Representative samples shall be supplied by the customer or selected from a second filter, identical with the filter used in the main test. Samples from the filter shall be selected (e.g. by cutting) in such a way that they represent the complete filter. The locations where media samples are to be cut shall be randomised. If flat samples cannot be cut from the filter a small piece from the filter shall be cut out and sealed into a frame fitting into the test system. The total area of all samples tested should include 600 cm^2, and at least three samples.

11.4 Measurement of the filter medium efficiency

11.4.1 General

Discharging measurements (unconditioned and conditioned media) shall be made with both with 100 % and 50 % of nominal velocity through the filter sample. Results with the 100 % nominal velocity shall be used for classification purposes. Results with the 50 % velocity shall be reported and can be used for judging the effectiveness of the discharge treatment.

The test is started by mounting a filter sample in the test equipment. The 100 % nominal velocity is the same as the nominal media velocity in the filter (using the effective filtering area). The velocity is adjusted and the filter sample pressure drop is measured.

The particulate filtration efficiency of the sample is determined by measuring the particle concentrations from upstream and downstream of the filter sample. The criteria for test aerosol, size range and efficiency measurement are made according to 10.3.2 (Efficiency measurement).

11.4.2 Isopropanol test

The isopropanol test is carried out as follows:

a) Weigh the media samples.

b) Measure the efficiency and pressure-drop values of the untreated samples. Designate the measured and the untreated efficiency as $\overline{E}_{U,s,i}$ and $p_{U,s}$,respectively.

c) Discharge the tested, untreated filter samples by immersing them in isopropanol for two minutes and then place them on a flat, inert surface for drying.

Caution – This should take place in a laboratory fume cupboard.

To allow quick evaporation of the IPA, the samples should be placed on a perforated surface surrounded by air.

d) After a drying period of 24 hours, determine the mass of the media samples. If mass has increased more than a few decimal grams from the initial value then the sample is wet and needs more drying.

e) Measure the efficiency and pressure-drop of the discharged samples. Designate the discharged efficiency and pressure drop as $\overline{E}_{D,s,i}$ and $p_{D,s}$,respectively.

11.4.3 Expression of results

The average efficiencies of the untreated and discharged filter samples are calculated.

a) The average efficiency, $\overline{E}_{U,i}$,of the untreated samples is calculated as given in the following equation:

$$\overline{E}_{U,i} = (\overline{E}_{U,1,i} + \overline{E}_{U,2,i} + \ldots + \overline{E}_{U,s,i})/n$$

where

i is the size range;

s is the sample (1, 2, 3,...);

n is the total number of samples.

b) The average discharged efficiency, $\overline{E}_{D,i}$,of the discharged samples is calculated as given in the following equation

$$\overline{E}_{D,i} = (\overline{E}_{D,1,i} + \overline{E}_{D,2,i} + \ldots + \overline{E}_{D,s,i})/n$$

where

i is the size range;

s is the sample (1, 2, 3,...);

n is the total number of samples.

c) The average 0,4 µm efficiency of the untreated samples, $\overline{E}_{U,i}$, is compared with the initial 0,4 µm efficiency, $\overline{E}_i$ of the filter. If the average efficiency of these untreated samples, $\overline{E}_{U,i}$, is outside the range of ($\overline{E}_i \pm 8$) % two more samples shall be tested and included in a new average calculation.

11.5 Report

The average discharged efficiency and the average untreated efficiency shall be reported for each size range, “i”.

Results with the 100 % nominal velocity shall be used for classification purposes. For 0,4 µm particles, the average discharged efficiency and the average untreated efficiency (at 100 % nominal velocity) shall be reported in the summary of the test report.

Results with the 50 % air flow rate shall be reported and can be used for judging the effectiveness of the discharge treatment.

12 Uncertainty calculation of the test results

The uncertainty on the average efficiency as defined corresponds to a two-sided confidence interval of the average value based on a 95 % confidence level. An upstream sample of no less than 500 particles shall be counted in evaluated size ranges up to 1 µm, in accordance with ISO 2854:1976:

$$\overline{E} - U \leq \overline{E} \leq \overline{E} + U \tag{11}$$

$$\overline{E} = \frac{1}{n}\sum E_i \tag{12}$$

$$U = t_{\left(1-\frac{\alpha}{2}\right)} \times \frac{\delta}{\sqrt{n}} \tag{13}$$

$$v = n - 1 \tag{14}$$

$$\delta = \sqrt{\frac{\sum\left(E_i - \overline{E}\right)^2}{n-1}} \tag{15}$$

where

$\overline{E}$ is the average efficiency;

U is the uncertainty;

E_i is the point value of the efficiency;

v is the number of degrees of freedom;

$t_{(1-\frac{\alpha}{2})}$ is the student's distribution, depending on the number of degrees of freedom, v ;

n is the number of calculated point efficiency values, E_i;

δ is the standard deviation.

The value of the ration $t_{(1-\frac{\alpha}{2})} \times \frac{1}{\sqrt{n}}$ can be found in Table 7. The uncertainty is calculated for each size range, *i*.

Table 7 —Student's distribution according to ISO 2854:1976

Samples n	Number of degrees of freedom $v = n - 1$	$t_{(1-\frac{\alpha}{2})} \times \frac{1}{\sqrt{n}}$
4	3	1,591
5	4	1,242
6	5	1,049
7	6	0,925
8	7	0,836
NOTE 95 % confidence level (α = 0,05)		

The overall uncertainty of the average efficiency for classification shall be calculated as follows:

$$U_i = \frac{1}{M} \times \sum_{j=1}^{n} \left(\frac{U_{i,(j-1)} + U_{i,j}}{2} \times M_j \right) \tag{16}$$

$$M = \sum_{j=1}^{n} M_j \tag{17}$$

where

U_i is the uncertainty of the average efficiency for size range "i";

$U_{i,j}$ is the uncertainty of the average efficiency for size range "i" after the dust loading phase "j";

M_j is the amount of dust fed during the dust holding phase "j";

n is the number of dust loading phases.

13 Reporting

13.1 General

The test report shall include a description of the test method and any deviations from it. The type and identification number of the particle counter used should be reported, as well as the method of air flow rate measurement. The report shall include the following:

— summary of the results;

— measured efficiencies and their uncertainties;

— calculated efficiencies;

— data and results of air flow rate and pressure drop measurements;

— data and results of dust loading measurements.

Test results shall be reported using the test report format used in this standard. Figure 13 to Figure 15 and Table 8 to Table 13 comprise the complete test report and are examples of acceptable forms. Exact formats are not requested, but the report shall include the items shown. The legend of each table and graph should preferably include the following:

— type of filter;

— the number of this standard;

— test number;

— test aerosol;

— test air flow rate.

The dust loading, test dust capacity and average arrestance shall be reported for specified final test pressure drops of 150 Pa and 250 Pa for G-filters. The dust loading, test dust capacity and average efficiency shall be reported for specified final test pressure drops of 250 Pa, 350 Pa and 450 Pa for M- and F-filters. Linear interpolation or extrapolation may be made used in order to convert the nearest measured values to the specified final test pressure drop.

13.2 Interpretation of test reports

This brief digest shall be included in the test reports. The interpretation shall be included after the issued report and shall be one page addition with the text sized to fill about half the page.

The interpretation of test reports

This brief review of the test procedures, including those for addressing the testing of electrostatically charged filters, is provided for those unfamiliar with EN 779 procedures. It is intended to assist in understanding and interpreting the results in the test report/summary. (For further details of procedures the full EN 779 document should be consulted).

Many types of air filter rely on the effects of passive static electric charges on the fibers to achieve high efficiencies, particularly in the initial stages of their working life. Environmental factors encountered in service may affect the action of these electric charges so that the initial efficiency may drop substantially after an initial period of service. In many cases this is offset or countered by an increase in efficiency (“mechanical efficiency”) as dust deposits in filter media. In the later stages of operating life the efficiency may increase to equal or exceed the initial efficiency. The reported untreated and conditioned (discharged) efficiencies show the extent of the electrical charge effect on initial performance. It should not be assumed that the measured conditioned (discharged) efficiency represents real life behaviour. It merely indicates the level of efficiency obtainable with the charge effect completely removed and with no compensating increase in mechanical efficiency.

For reasons of consistency filter efficiencies are measured using artificially generated clouds of synthetic DEHS material (droplets) with closely controlled particle size. These efficiency measurements are repeated after the filter has been loaded with ASHRAE loading dust until the resistance has risen to a value of 250 Pa in the case of the coarse (G) procedure and with up to a value of 450 Pa for the fine and medium (F and M) procedure. Test dust capacities measured in this way may be used for to compare performances and for rankings but should not be assumed to simulate real life operating conditions as the properties of dusts encountered in service conditions vary very widely.

13.3 Summary

The one page summary section of the performance report (Figure 13) shall include the following information:

a) General:

   1) testing organisation;

   2) date of test;

3) name of test operator;

4) report number;

5) test requested by;

6) device delivered by;

7) date of receiving the device.

b) Manufacturer's data of the tested device:

1) description of the device;

2) type, identification and marking;

3) manufacturer;

4) physical description of construction (e.g. pocket filter, number of pockets);

5) dimensions (width, height, depth);

6) type of media, if possible or available the following shall be described:

i) identification code (e.g. glass fibre type ABC123, inorganic fibre type 123ABC);

ii) effective filter area;

iii) type and amount of dust adhesive.

7) additional information if needed.

c) Test data:

1) test air flow rate;

2) test air temperature and relative humidity;

3) type of loading dust and test aerosol.

d) Results:

1) initial and final test pressure drop;

2) initial and average efficiency (0,4 µm), including uncertainty of average efficiency;

3) initial and average arrestance;

4) test dust capacity;

5) untreated / discharged efficiency (0,4 µm);

6) filter class including test conditions in parentheses if test air flow or final test pressure drop are non-standard.

e) Performance curves:

1) pressure drop versus air flow rate for clean filter;

2) pressure drop versus loading dust fed;

3) efficiency (0,4 µm) versus loading dust fed;

4) arrestance versus loading dust fed. The curve shall be drawn through arrestance values plotted at the mid-point of their associated weight increments.

f) Statement:

1) the results relate only to the tested item;

2) the performance results cannot by themselves be quantitatively applied to predict filter performance in service.

In the summary report:

— the results shall be rounded to the nearest integer;

— except average efficiency of 0,4 µm, the uncertainty of efficiency values does not have to be reported.

13.4 Efficiency

In addition to the summary report, results of the efficiency measurements shall be reported both in tables and as graphs.

a) Tables:

1) efficiency and uncertainty for each particle size after different dust loading phases (Table 8);

2) average efficiency for each particle size at different final test pressure drops (test dust capacity and filter class may be included) (Table 9);

3) pressure drop versus air flow and dust loading (Table 10);

4) arrestance versus pressure drop and dust loading (Table 11);

5) efficiency of untreated and discharged efficiency (Table 12 and Table 13).

b) Graphs:

1) efficiency versus particle size after different dust loading phases (Figure 14);

2) average efficiency at different final test pressure drops (Figure 15);

3) initial efficiency (Figure 13).

Linear interpolation or extrapolation of the nearest measured particle efficiency to a specified final test pressure drop shall be made in the calculation of an efficiency at the specified final test pressure drop. Alternatively, the average results may be interpolated or extrapolated to the nearest final test pressure drops.

13.5 Pressure drop and air flow rate

All required data and results of the air flow rate and pressure drop measurements throughout the complete test shall be reported in table format. The pressure drop curves for the clean filter and the dust loaded filter are reported in the summary section.

The reported pressure drops shall be corrected to an air density of 1,20 kg/m^3. The corrections can be made as described in Annex C.

13.6 Arrestance and test dust capacity

All required data and results of the dust loading and arrestance measurements shall be reported in table format.

The initial arrestance, average arrestance and test dust capacity at different final test pressure drops, and the arrestance curve, are reported in the summary section.

13.7 Marking

The filter shall be marked with a type identifying marking. The following details shall be provided:

— name, trade mark or other means of identification of the manufacturer;

— type and reference number of the filter;

— number of this standard;

— group and class of the filter according to this standard;

— flow rate at which the filter has been classified.

If the correct mounting cannot be deduced, marking is necessary for correct fitting in the ventilation duct (e.g. ”top”, ”direction of flow”).

The marking shall be as clearly visible and as durable as possible.

EN 779:2012 - AIR FILTER TEST RESULTS				
Testing organisation:		Report nr.:		
GENERAL				
Test no.:	Date of test: yyyy-mm-dd		Supervisor:	
Test requested by:		Device receiving date: yyyy-mm-dd		
Device delivered by:				
DEVICE TESTED				
Model:	Manufacturer:		Construction:	
Type of media:	Net effective filtering area: m^2		Filter dimensions (width × height × depth): mm × mm × mm	
TEST DATA				
Test air flow rate: m^3/s	Test air temperature: ºC	Test air relative humidity: %	Test aerosol:	Loading dust:
RESULTS				
Initial pressure drop: Pa	Initial arrestance: %	Initial efficiency (0,4 µm): %	Test dust capacity: g / g / g	Untreated / discharged efficiency of media (0,4 µm): % / %
Final test pressure drop: Pa/ Pa/ Pa	Average arrestance: %	Average efficiency (0,4 µm): % / % / %	Filter class (Pa):	
Remarks:				

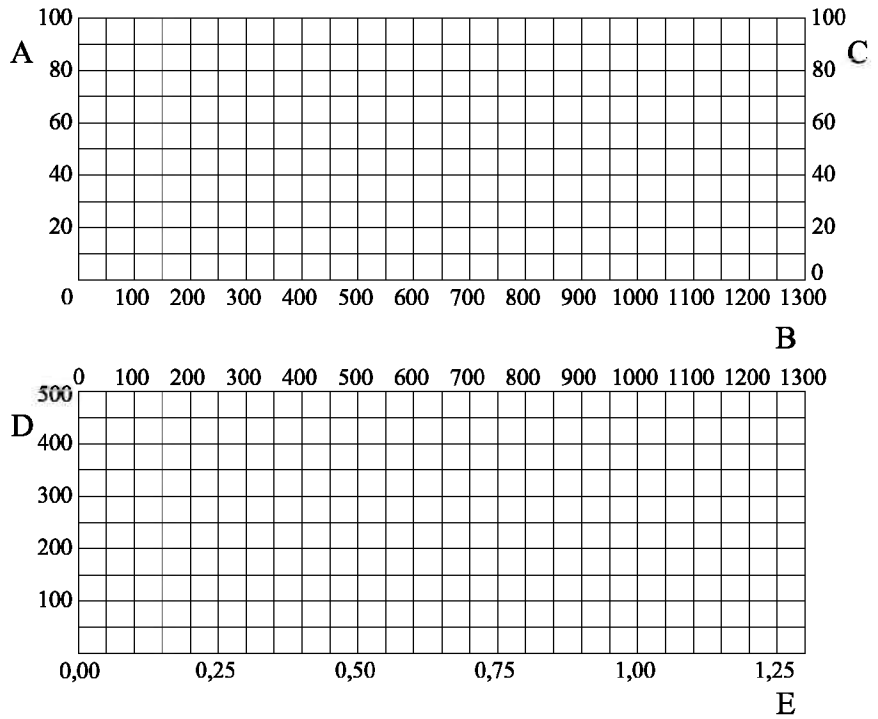

Curve 4
Arrestance as a function of dust fed at the test air flow rate.

Curve 3
Efficiency (0,4 µm) as a function of dust fed at the test air flow rate.

Curve 2
Pressure drop as a function of dust fed at the test air flow rate.

Curve 1
Pressure drop as function of the air flow rate (clean device).

A - Efficiency (0,4 µm),%
B - Dust fed, g
C - Arrestance, %
D - Pressure drop
E - Air flow rate, m^3/s

NOTE The performance results are only valid for the tested item cannot by themselves be quantitatively applied to predict filter performance in service.

Figure 13 — Summery section of performance report

Table 8 — Efficiency and uncertainty after different dust loading phases

EN 779:2012 - Efficiency and uncertainty after different dust loading phases								
Air filter:								
Test no.:								
Test aerosol:								
Air flow rate: m^3/s								
Particle size µm		**Efficiency** %						
		Pressure drop/ Dust fed						
Interval	**Mean**	Pa g	Pa g	Pa g	Pa g	Pa g	Pa g	Pa g
-		±	±	±	±	±	±	±
-		±	±	±	±	±	±	±
-		±	±	±	±	±	±	±
-		±	±	±	±	±	±	±
-		±	±	±	±	±	±	±
-		±	±	±	±	±	±	±
-		±	±	±	±	±	±	±
-		±	±	±	±	±	±	±
-		±	±	±	±	±	±	±
-		±	±	±	±	±	±	±
NOTE The uncertainty of the measured efficiencies is reported on a 95 % confidence level.								

Table 9 — Average efficiency at different final test pressure drops

EN 779:2012 - Average efficiency at different final test pressure drops				
Air filter:				
Test no.:				
Test aerosol:				
Air flow rate: m^3/s				
Particle size µm		**Average efficiency** %		
Interval	**Mean**	**Final test pressure drop**		
		Pa	Pa	Pa
-		±	±	±
-		±	±	±
-		±	±	±
-		±	±	±
-		±	±	±
-		±	±	±
-		±	±	±
-		±	±	±
-		±	±	±
-		±	±	±
Test dust capacity		g	g	g
Filter class		-	-	

EN 779:2012 – Efficiency after different dust loading phases

Air filter:
Test no.:
Test aerosol:
Air flow rate: m^3/s

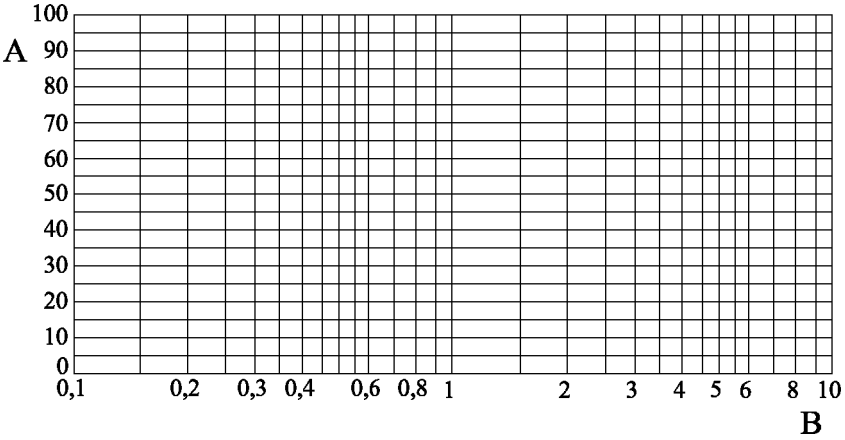

Dust loading/ pressure drop

1)	g	/	Pa
2)	g	/	Pa
3)	g	/	Pa
4)	g	/	Pa
5)	g	/	Pa
6)	g	/	Pa
7)	g	/	Pa

A – Efficiency, %

B – Particle size, µm

Figure 14 — Efficiency after different dust loading phases

EN 779:2012 – Initial and average efficiency at different final test pressure drops

Air filter:
Test no.:
Test aerosol:
Air flow rate: m^3/s

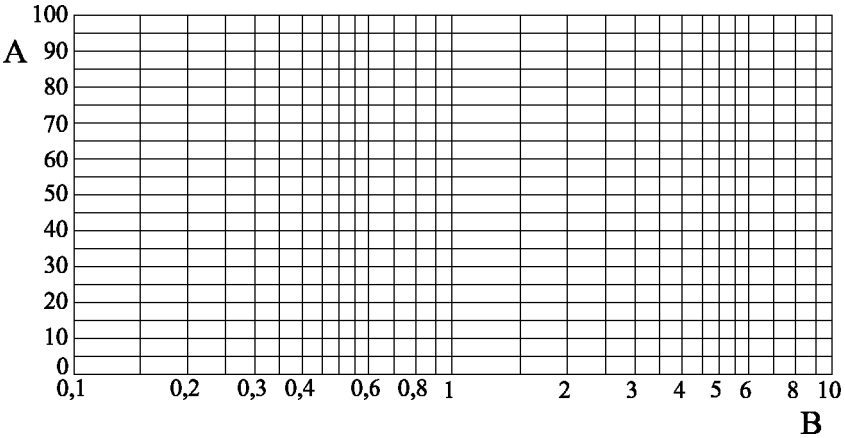

Pressure drop

1) Initial
2) 250 Pa
3) 350 Pa
4) 450 Pa

A - Average efficiency, %

B - Particle size, µm

Figure 15 — Initial and average efficiency at different final test pressure drops

Table 10 — Air flow rate and pressure drop after different dust loading phases

EN 779:2012 - Air flow rate and pressure drop after different dust loading phases												
Air filter:												
Test no.:												
Test aerosol:												
Air flow rate: m^3/s												
Date	**Dust fed**	**Air flow meter**				**Filter**						
	m_{tot} g	t_f ºC	p_{sf} kPa	Δp_f Pa	q_m kg/m^3	t ºC	φ %	p_a kPa	ρ kg/m^3	q_v m^3/s	Δp Pa	$\Delta p_{1,20}$ Pa
	Clean filter											
yyyy-mm-dd												
yyyy-mm-dd												
yyyy-mm-dd												
yyyy-mm-dd												
yyyy-mm-dd												
	Clean filter pressure drop is proportional to $(q_v)^n$, where n =											
	Dust loading phase											
yyyy-mm-dd												
yyyy-mm-dd												
yyyy-mm-dd												
yyyy-mm-dd												
yyyy-mm-dd												
yyyy-mm-dd												
yyyy-mm-dd												
yyyy-mm-dd												
yyyy-mm-dd												
yyyy-mm-dd												
yyyy-mm-dd												
yyyy-mm-dd												

Symbols and units

m_{tot}	Cumulative mass of dust fed to filter, g	t_f	Temperature at air flow meter, ºC
p_a	Absolute air pressure upstream of filter, kPa	ρ	Air density upstream of filter, kg/m^3
p_{sf}	Air flow meter static pressure, kPa	φ	Relative humidity upstream of filter, %
q_m	Mass flow rate, kg/m^3	Δp	Measured filter pressure drop, Pa
q_v	Air flow rate at filter, m^3/s	Δp_f	Air flow meter differential pressure, Pa
t	Temperature upstream of filter, ºC	$\Delta p_{1,20}$	Filter pressure drop at air density 1,20 kg/m^3, Pa

Table 11 — Pressure drop and arrestance after different dust loading phases

EN 779:2012 - Pressure drop and arrestance after different dust loading phases									
Air filter:									
Test no.:									
Test aerosol:									
Air flow rate: m^3/s									
Date	Δp_1 Pa	Δm g	m_{tot} g	Δp_2 Pa	m_1 g	m_2 g	Δm_{ff} g	m_d g	A %
yyyy-mm-dd									
yyyy-mm-dd									
yyyy-mm-dd									
yyyy-mm-dd									
yyyy-mm-dd									
yyyy-mm-dd									

Mass of tested device

Initial mass of tested device: g

Final mass of tested device: g

Symbols and units

A Arrestance, %

m_d Dust in duct after device, g

m_{tot} Cumulative mass of dust fed to filter, g

m_1 Mass of final filter before dust increment, g

m_2 Mass of final filter after dust increment, g

Δm Dust increment, g

Δm_{ff} Mass gain of final filter, g

Δp_1 Pressure drop before dust increment, Pa

Δp_2 Pressure drop after dust increment, Pa

Table 12 — Efficiency and pressure drop of untreated filter material

EN 779:2012 - Efficiency and pressure drop of untreated filter material					
Air filter:					
Test no.:					
Test aerosol:					
Air flow rate: m^3/s					
Media velocity: m/s					
Size of material sample: m^2					
Particle size µm		**Sample 1**	**Sample 2**	**Sample 3**	**Average**
		Efficiency %			
Interval	**Mean**	**Pressure drop**			
		Pa	Pa	Pa	Pa
-		±	±	±	
-		±	±	±	
-		±	±	±	
-		±	±	±	
-		±	±	±	
-		±	±	±	
-		±	±	±	
-		±	±	±	
-		±	±	±	
NOTE The uncertainty of the measured efficiencies is reported on a 95 % confidence level.					

Table 13 — Efficiency and pressure drop of discharged filter material

EN 779:2012 - Efficiency and pressure drop of discharged filter material					
Air filter:					
Test no.:					
Test aerosol:					
Air flow rate: m^3/s					
Media velocity: m/s					
Size of material sample: m^2					
Particle size µm		**Sample 1**	**Sample 2**	**Sample 3**	**Average**
		Efficiency %			
Interval	**Mean**	**Pressure drop**			
		Pa	Pa	Pa	Pa
-		±	±	±	
-		±	±	±	
-		±	±	±	
-		±	±	±	
-		±	±	±	
-		±	±	±	
-		±	±	±	
-		±	±	±	
-		±	±	±	
NOTE The uncertainty of the measured efficiencies is reported on a 95 % confidence level.					

Annex A
(informative)

Shedding from filters

A.1 General

The term "shedding" comprises three separate aspects of filter behaviour, particle bounce, release of fibres or particulate matter from filter material and re-entrainment of particles. Some or all of these phenomena are likely to occur to some extent during the life cycle of an installed filter.

A.2 Shedding

A.2.1 Particle bounce

In an ideal filtration process, each particle would be permanently arrested at the first collision with a filtering surface such as a filter fibre, or with an already captured particle. For small particles and low air velocities, the adhesion force greatly exceeds the kinetic energy of the airborne particle in the air stream, and once captured, such particles are unlikely to be dislodged from the filter. As particle size and air velocity increase, this is progressively less so; larger particles may "bounce" off of a fibre. Thereby they normally lose enough energy to be captured in a subsequent collision with a fibre. However, if no effective contact with a fibre follows, the particles will be shed, i.e. discharged from the filter, which will display a corresponding reduction in apparent efficiency for particles in that size range.

A measurement method to quantify this type of shedding is defined in ASHRAE/ANSI Standard 52.2:1999, which uses solid particles. The particle bounce effect cannot be measured according to the EN 779 with liquid aerosol.

The particle bounce effect is more pronounced for filters of group G then for those of group M and F.

Some investigators [see the references 1) and 2) in this Annex] have found a reduction in filter efficiency in the particle size range 4 µm to 8 µm which may be due to this effect. This European standard procedures does not provide means of measuring particle size efficiencies for solid particles at sizes above 3,0 µm.

A.2.2 Release of fibres or particulate matter from filter material

Some designs of filter include filter media either containing and/or generating some loose fibres or particulate matter during use. During filter operation this loose material can be lost into the air flow. The extent of such fibre shedding depends on the integrity of the media fibre structure and its rigidity and stability in the face of varying dust burdens and air velocities throughout the operating life of the filter. It should be noted that the quantity of fibres shed in this way is normally negligible in comparison with the total amount of dust penetrating through a filter loaded by typical environmental dust burdens.

The releasing effect of fibres or particulate matter from the filter material is more pronounced for filters of group M and F than for those of group G.

A.2.3 Re-entrainment of particles

As the quantity of the arrested dust on the filter increases, further effects may become apparent according to the following:

a) an incoming particle may impact on a captured particle and re-entrain it into the air stream;

b) the air velocity in the flow channels through the medium will increase because of the space occupied by captured particles. Furthermore, the filter medium may become compressed by the increased resistance to air

flow thereby causing even further increase in velocity in the air channels. The consequent increased fluid drag on deposited particles may re-entrain some of them;

c) movements of the filter medium during operation cause rearrangement of dust held in the filter medium structure. This leads to an immediate re-entrainment of dust. Filter media movements can be caused by a variety of circumstances as:

1) normal air flow through the filter combined with periodic (e.g. daily) start/stop operation of the air conditioning plant;

2) varying air flow rates leading to compression and decompression of the media;

3) mechanical vibration.

Re-entrainment from these causes (also known as "blow-off" or "unloading") may be measured and quantified (see references 3) and 4) in this Annex and also 10.4.2 in this standard).

The re-entrainment effect is equally pronounced for filters of groups F, M and G.

A.3 Testing

The efficiency/particle size curves (F group filters) provided in this standard reflect normally very little of the shedding effects discussed above. The arrestance curves (G group filters) prescribed in this standard reflect them only partly, if at all. Any drop in the value of the arrestance or resistance during the course of a filter loading test should be taken as an indication that shedding may have occurred.

Meaningful measurements of shedding as particle release and re-entrainment are not easy to perform. Particle counter sampling systems are not readily adaptable to measuring short-term "bursts" or assemblages of particles.

For a future revision of this standard, consideration will be given to developing and establishing ways in which significant "shedding" or "re-entrainment" of particles or fibres can be detected, quantified and reported. In doing so, attention shall be paid as before to the difficulty in relating this aspect of filter performance in real life with performance measurements using synthetic test dust. Users should be aware of the possibility of filters exhibiting shedding behaviour. In operational situations where the occurrence of this phenomenon is suspected, plant operators will need to consider carrying out in-plant diagnostic air sampling tests.

A.4 References

1) Phillips B. A., Davis, W. T. and Dever, M., *Investigation of the Effect of a Topically Applied Tackifier in Reducing Particle Bounce in a Melt-Blown Air Filter* (Filtration & Separation, 1996, page 933)

2) Qian Y., Willeke K., Ulevicius V. and Grinshpun S. A., *Particle Re-entrainment from Fibrous Filters* (Aerosol Science and Technology, 27:3)

3) Kuehn T.H., Yang C. H. and Kulp R. H., *Effects of Fan Cycling on the Performance of Particulate Air filters used for IAQ Control* (Indoor Air '96, The 7th International Conference on Indoor Air Quality and Climate, Vol. 4, page 211)

4) Rivers R. D. and Murphy D. J., *Determination of Air Filter Performance under Variable Air Volume (VAV) Conditions* (ASHRAE 675-RP:1996)

Annex B
(informative)

Commentary

B.1 General

The procedures described in this standard have been developed from those given in EN 779:2002. The basic design of test rig given in EN 779:2002 is retained. A challenge aerosol of DEHS (or equivalent) is dispersed evenly across the duct upstream of the filter being tested. Representative upstream and downstream samples are analysed by an optical particle counter (OPC) to provide filter particle size efficiency data.

The detailed design of the rig is not prescriptive; however stringent new rig qualification procedures will bring improved accuracy and reliability to the test results.

B.2 Classification

The EN 779:2002 classification system (comprising groups F and G filters) has been changed to three groups (F-, M- and G-filters). The classification group is determined from the average filtration efficiency with respect to liquid DEHS particles of 0,4 µm diameter.

Filters found to have an average efficiency value of less then 40 % of 0,4 µm particles will be allocated to group G (Coarse filters) and the efficiency reported as "< 40 %". The classification of G filters (G1 - G4) is based on their average arrestance with the loading dust.

Filters found to have an average efficiency value from 40 % to less than 80% 40 % of 0,4 µm particles will be allocated to group M (Medium -filters) (M5, M6) and the classification is based on their average efficiency (0,4 µm). The filter classes F5 and F6 have changed to M5 and M6, but with same requirements as in the old classification system.

Filters found to have an average efficiency of 80% or more 40 % of 0,4 µm particles will be allocated to group F (Fine – filters) (F7 - F9) and the classification is based on their average efficiency as in the old system and the minimum efficiency during the test.

B.3 Test

B.3.1 Test aerosol

A challenge aerosol of DEHS (or equivalent) was chosen for the efficiency test for the following reasons:

— experience has already been gained by users of EN 779:2002 and Eurovent 4/9 techniques so that much suitable equipment already exists;

— liquid aerosols are easy to generate in the concentrations, size range and degree of consistency required;

— the particle counters are calibrated against spherical latex particles; the determination of particle size of spherical liquid particles using optical particle counters is more accurate than would be the case with solid particles of salt and test dusts with a nonspherical shape.

B.3.2 Loading dust

The loading dust (synthetic test dust) is identical with that in ANSI/ASHRAE 52.2 and has the following composition:

— 72 % by weight standardised air cleaner test dust (ISO 12103-A2, ISO 12103-1:1997);

— 23 % by weight carbon powder. (ASTM D3765 CTAB surface of (27 ± 3) m^2/g, ASTM D2414 DBP adsorption of (0,68 ± 0,07) cm^3/g and an ASTM D3265 tint strength of (43 ± 4) units);

— 5 % by weight cotton linters; the cotton linters shall be second cut linters removed from the cotton seed and ground in a Wiley Mill fitted with a 4 mm screen.

It shall be procured in the composition already mixed by the manufacturer.

The dust is not representative of the real world, but has been used for over 20 years to “simulate” filter loading. The dust will still be used until a more representative dust is developed.

B.3.3 Distribution and sampling of aerosols

In consequence of using a liquid challenge aerosol for efficiency measurements, provision shall be made for its even distribution at presentation to the filter. Use should be made of appropriate injection or mixing devices to ensure a coefficient of variation of < 10 % across the filter face.

Aerosol samples for concentration and size analysis both upstream and downstream of the filter shall also be fully representative at the point of sampling and compensation shall be able to be made for any effect of particle loss in sampling lines.

The problem of obtaining a representative sample from a single point sampling position requires addressing; it is likely to be less important for the lower efficiency filters (class M5) than for the higher end of the performance spectrum (class F9 filters).

B.3.4 Particle counter characteristics

The optical particle counter shall be suitable for providing information on particle sizes between 0,2 µm and 3,0 µm and for concentrations more than 100 particles per cm^3. Measuring channels shall include 0,4 µm and 3,0 µm. The same instrument is to be used for both upstream and downstream sampling.

B.3.5 Flat sheet test

The minimum air flow in the standard is 0,24 m^3/s, which means that flat sheet material using a speed lower than 0,62 m/s cannot be tested directly as a flat sheet. For testing at lower velocities through the material, it has to be mounted with an extended surface. If the material is fixed to a W-shaped frame system, it can be tested as a common filter. There is no correlation between the w-shape and flat sheet but the method could be used for comparing and evaluating material.

Figure B.1 describes a typical W-form construction which could be used for evaluating filter material. The W-form gives one square meter (1 m^2) net effective filtering area, and therefore, the same figures representing the flow rate (in m^3/s) and the media velocity (in m/s). 0,4 m^3/s gives 0,4 m/s through media.

The filter material to be tested shall be laid on the frame and stretched and fastened to the frame with the help of the counter frames.

B.4 Filtration characteristics

B.4.1 General

Initiatives to address the potential problems of solid particle re-entrainment have been included in Annex A.

B.4.2 Pressure drop

All pressure drops measured during the test should be corrected to a reference air density of 1,20 kg/m^3 which corresponds to standard air conditions: temperature 20ºC, barometric pressure 101,325 kPa, relative humidity 50 %. However, as long as the air density is between 1,16 kg/m^3 and 1,24 kg/m^3, no corrections need to be made.

B.4.3 Discharged efficiency

The efficiency measured in this standard and the classification of the filter is based on neutralised test aerosol. To check if the filter efficiency is dependent on the electrostatic removal mechanism, the initial efficiency could be tested with both neutralised and non neutralised DEHS test aerosol generated with a Laskin nozzle. A significant increase of efficiency for smaller particles, when tested with neutralised aerosol, indicates that the filter is depending on the electrostatic removal mechanism. A test at half the air flow will also give a significant increase in efficiency for smaller particles if the filter efficiency is based on electrostatic charge.

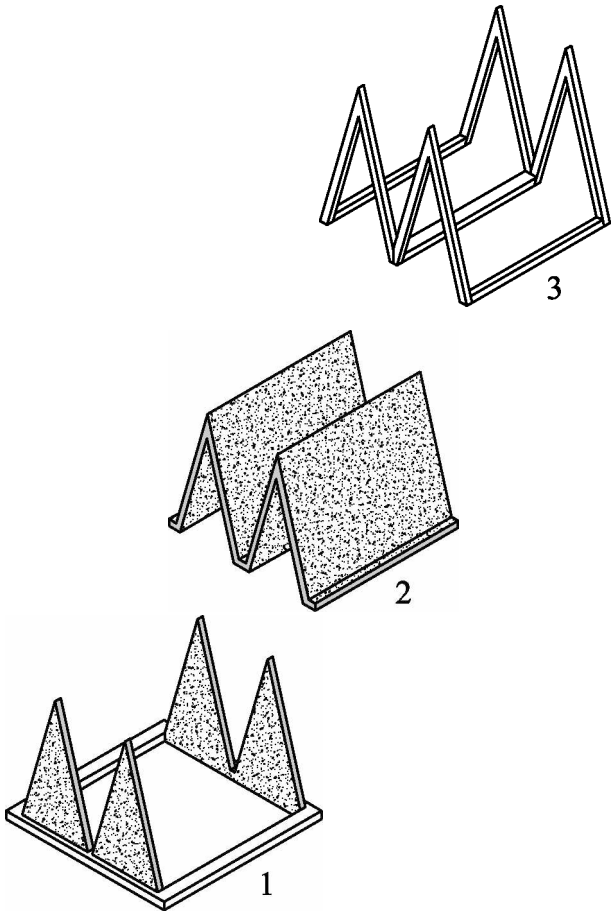

Key

1 W-form frame
2 Filter material (1 m^2)
3 W-form counter frame

Figure B.1 — Example of W-form frame and details for testing filter material

Annex C
(informative)

Pressure drop calculation

All pressure losses measured during the test should be corrected to a reference air density of 1,20 (1,1987) kg/m^3 which corresponds to standard air conditions: temperature 20 ºC, barometric pressure 101,325 kPa, relative humidity 50 %. However, as long as the air density is between 1,16 kg/m^3 and 1,24 kg/m^3, no corrections need to be made.

The pressure loss of a filter can be expressed as:

$$\Delta p = c\,(q_V)^n \tag{C.1}$$

$$c = k \times \mu^{2-n} \times \rho^{n-1} \tag{C.2}$$

where

Δp is the pressure loss, Pa;

k is a constant;

q_v is the air flow rate, m^3/s;

μ is the dynamic viscosity of air, Pa s;

n is an exponent;

ρ is the air density, kg/m^3.

The readings of the air flow measuring system shall be convened to the volumetric air flow rate at the conditions prevailing at the inlet of the tested filter. With these air flow rate values and the measured pressure losses, the exponent “n” from Equation (C.1) could be determined by using a least square technique.

With a known value of exponent “n”, the measured pressure losses can be corrected to standard air conditions using the following equation:

$$\Delta p_{1,20} = \Delta p \left(\frac{\mu_{1,20}}{\mu}\right)^{2-n} \times \left(\frac{\rho_{1,20}}{\rho}\right)^{n-1} \tag{C.3}$$

where the unsubscripted quantities refer to the values at the test conditions and the subscripted quantities to values at the standard air conditions and:

$\rho_{1,20}$= 1,1987 kg/m^3,

$\mu_{1,20}$= 18,097 × 10^{-6} Pa s

The exponent “n” is usually determined only for a clean filter. During the dust loading phase exponent “n” can change. As it is undesirable to measure pressure loss curves after each dust loading phase, the initial value of exponent “n” may be used during the filter test. The air density ρ (kg/m^3) of temperature t (ºC), barometric pressure p (Pa) and relative humidity φ (%) can be obtained by Equation (C.4):

$$\rho = \frac{p - 0{,}378 p_W}{287{,}06\,(t + 273{,}15)} \tag{C.4}$$

where p_w (Pa) is the partial vapour pressure of water in air given by the following equation:

$$p_W = \frac{\varphi}{100} p_{WS} \tag{C.5}$$

and p_{ws} (Pa) is the saturation vapour pressure of water in air at temperature t (ºC) obtained from Equation (C.6):

$$p_{WS} = \exp\left[59{,}484085 - \frac{6790{,}4985}{t + 273{,}15} - 5{,}02802 \times \ln(t + 273{,}15)\right] \tag{C.6}$$

The dynamic viscosity μ (Pa s) at a temperature t (ºC) can be obtained from Equation (C.7):

$$\mu = \frac{1{,}455 \cdot 10^{-6} (t + 273{,}15)^{0{,}5}}{1 + 110{,}4 / (t + 273{,}15)} \tag{C.7}$$

Annex D
(informative)

Example of a completed test report

D.1 Example of test reports

EN 779:2012 - AIR FILTER TEST RESULTS				
Testing organisation: Superlab Inc.		Report nr.: 007-20XX		
GENERAL				
Test no.: 12345	Date of test: 20XX-02-01		Supervisor: T. Master	
Test requested by: World Best Filter Inc.		Device receiving date: 26-01-20 XX		
Device delivered by: World Best Filter Inc.				
DEVICE TESTED				
Model: WBF Leader 100	Manufacturer: World Best Filter Inc.		Construction: Filter compact 4 V-shaped pockets	
Type of media: Glass & plastic fibre WBF Mix G & F	Net effective filtering area: 19 m^2		Filter dimensions (width × height × depth): 592 mm × 592 mm × 592 mm	
TEST DATA				
Test air flow rate: 0,944 m^3/s	Test air temperature: 20 to 24 ºC	Test air relative humidity: 26 to 61 %	Test aerosol: DEHS	Loading dust: ASHRAE
RESULTS				
Initial pressure drop: 99 Pa	Initial arrestance: 98 %	Initial efficiency (0,4 µm): 70 %	Test dust capacity: 254 g / 369 g / 461 g	Untreated / discharged efficiency of media (0,4 µm): 70,6 % / 69,6 %
Final test pressure drop: 250 Pa / 350 Pa /450 Pa	Average arrestance: 99 %	Average efficiency (0,4 µm): 93 % / 95 % / 96 %	Filter class (450 Pa): F9	
Remarks: -				

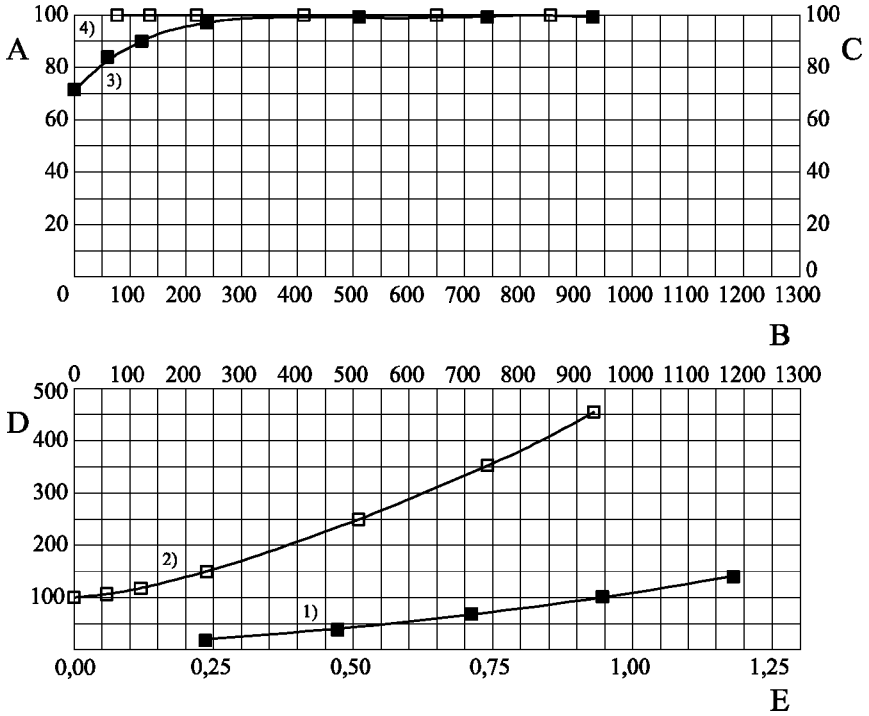

Curve 4
Arrestance as a function of dust fed at the test air flow rate

Curve 3
Efficiency (0,4 µm) as a function of dust fed at the test air flow rate.

Curve 2
Pressure drop as a function of dust fed at the test air flow rate.

Curve 1
Pressure drop as function of the air flow rate (clean device).

A - Efficiency (0,4 µm),%
B - Dust fed, g
C - Arrestance,%
D - Pressure drop
E - Air flow rate, m^3/s

NOTE The performance results are only valid for the tested item cannot by themselves be quantitatively applied to predict filter performance in service.

Figure D.1 — Summary of test results

Table D.1 — Efficiency and uncertainty after different dust loading phases

EN 779:2012 - Efficiency and uncertainty after different dust loading phases								
Air filter: WBF Leader 100								
Test no.: 12345								
Test aerosol: DEHS								
Air flow rate: 0,944 m^3/s								
Particle size µm		**Efficiency** %						
		Pressure drop/ dust fed						
Interval	**Mean**	99 Pa 0 g	106 Pa 30 g	119 Pa 60 g	148 Pa 120 g	250 Pa 255 g	351 Pa 370 g	453 Pa 465 g
0,20 - 0,25	0,22	59,9 ± 1,7	73,1 ± 1,1	82,3 ± 1,4	93,5 ± 1,1	98,8 ± 0,4	98,8 ± 0,5	99,0 ± 0,2
0,25 - 0,35	0,30	64,0 ± 3,1	77,6 ± 2,5	84,2 ± 0,9	94,9 ± 1,0	99,0 ± 0,3	99,1 ± 0,5	99,1 ± 0,2
0,35 - 0,45	0,40	70,2 ± 1,4	83,7 ± 0,8	89,4 ± 0,8	96,7 ± 0,5	99,4 ± 0,2	99,2 ± 0,3	99,3 ± 0,1
0,45 - 0,60	0,52	76,5 ± 2,1	88,7 ± 2,0	94,0 ± 0,8	97,9 ± 0,4	99,5 ± 0,3	99,4 ± 0,1	99,4 ± 0,2
0,60 - 0,75	0,67	86,4 ± 1,5	92,9 ± 1,4	97,2 ± 0,4	99,1 ± 0,5	99,7 ± 0,2	99,6 ± 0,2	99,1 ± 0,3
0,75 - 1,00	0,87	90,3 ± 1,2	96,2 ± 0,7	98,5 ± 0,4	99,5 ± 0,2	99,5 ± 0,2	99,6 ± 0,2	99,5 ± 0,3
1,00 - 1,50	1,22	94,9 ± 0,6	98,2 ± 0,5	99,5 ± 0,2	99,6 ± 0,3	99,5 ± 0,2	99,6 ± 0,2	99,6 ± 0,1
1,50 - 2,00	1,73	98,7 ± 0,3	99,3 ± 0,3	99,6 ± 0,2	99,7 ± 0,2	99,7 ± 0,1	99,6 ± 0,2	99,5 ± 0,3
2,00 - 3,00	2,45	99,6 ± 0,3	99,8 ± 0,1	99,8 ± 0,1	99,7 ± 0,3	99,8 ± 0,1	99,8 ± 0,2	99,7 ± 0,2
3,00 - 4,50	3,67	99,7 ± 0,4	99,9 ± 0,2	99,7 ± 0,3	99,8 ± 0,4	99,8 ± 0,4	99,7 ± 0,3	99,8 ± 0,3
NOTE The uncertainty of the measured efficiencies is reported on a 95 % confidence level.								

Table D.2 — Average efficiency at different final test pressure drops

EN 779:2012 - Average efficiency at different final test pressure drops				
Air filter: WBF Leader 100				
Test no.: 12345				
Test aerosol: DEHS				
Air flow rate: 0,944 m^3/s				
Particle size µm		**Average efficiency** %		
Interval	**Mean**	**Final test pressure drop**		
		250 Pa	350 Pa	450 Pa
0,20 - 0,25	0,22	88,6 ± 1,0	91,7 ± 0,8	93,2 ± 0,7
0,25 - 0,35	0,30	90,2 ± 1,1	93,0 ± 0,9	94,2 ± 0,8
0,35 - 0,45	0,40	93,1 ± 0,6	95,0 ± 0,5	95,8 ± 0,4
0,45 - 0,60	0,52	95,5 ± 0,7	96,7 ± 0,6	97,3 ± 0,5
0,60 - 0,75	0,67	97,3 ± 0,6	98,0 ± 0,5	98,3 ± 0,4
0,75 - 1,00	0,87	98,4 ± 0,4	98,8 ± 0,3	98,9 ± 0,3
1,00 - 1,50	1,22	99,1 ± 0,3	99,2 ± 0,3	99,3 ± 0,2
1,50 - 2,00	1,73	99,6 ± 0,2	99,6 ± 0,2	99,6 ± 0,2
2,00 - 3,00	2,45	99,8 ± 0,2	99,8 ± 0,2	99,8 ± 0,2
3,00 - 4,50	3,67	99,8 ± 0,4	99,8 ± 0,4	99,8 ± 0,3
Test dust capacity		254 g	369 g	461 g
Filter class		-	-	F9

EN 779:2012 – Efficiency after different dust loading phases

Air filter: WBF Leader 100
Test no.: 12345
Test aerosol: DEHS
Air flow rate: 0,944 m^3/s

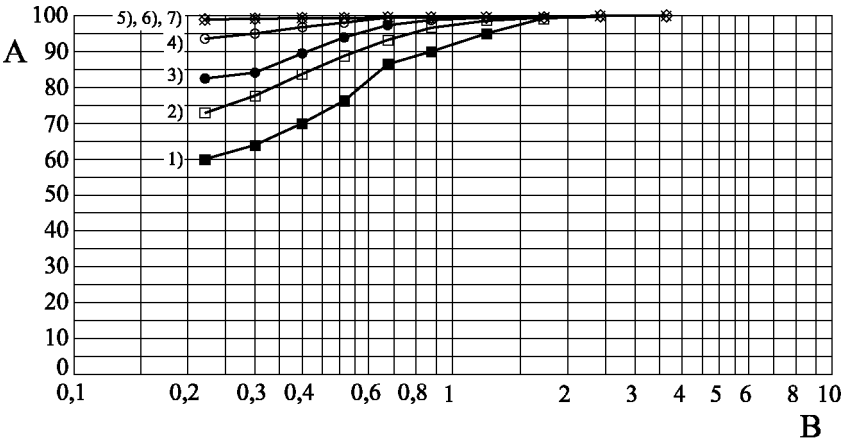

Dust loading/ pressure drop			
1)	0 g	/	99 Pa
2)	30 g	/	106 Pa
3)	60 g	/	119 Pa
4)	120 g	/	148 Pa
5)	255 g	/	250 Pa
6)	370 g	/	351 Pa
7)	465 g	/	453 Pa

A – Efficiency, %

B – Particle size, µm

Figure D.2 — Efficiency after different dust loading phases

EN 779:2012 – Initial and average efficiency at different final test pressure drops

Air filter: WBF Leader 100
Test no.: 12345
Test aerosol: DEHS
Air flow rate: 0,944 m^3/s

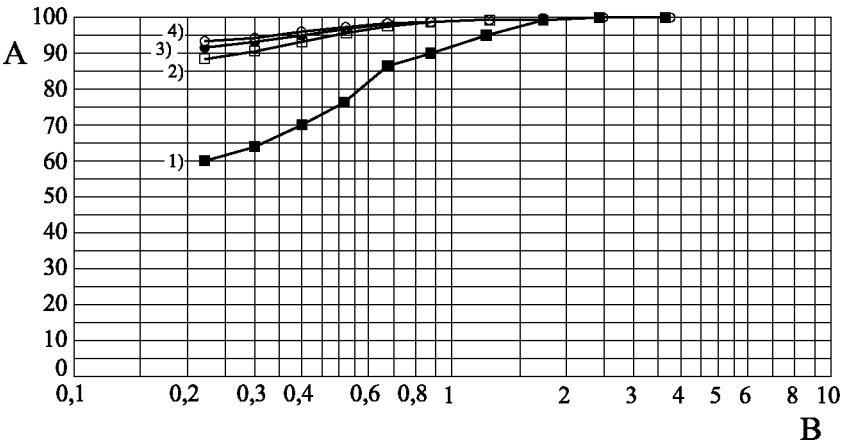

Pressure drop

1) Initial
2) 250 Pa
3) 350 Pa
4) 450 Pa

A - Average efficiency, %

B - Particle size, µm

Figure D.3 — Initial and average efficiency at different final test pressure drops

Table D.3 — Air flow rate and pressure drop after different dust loading phases

EN 779:2012 - Air flow rate and pressure drop after different dust loading phases												
Air filter: WBF Leader 100												
Test no.: 12345												
Test aerosol: DEHS												
Air flow rate: 0,944 m^3/s												
Date	**Dust fed**	**Orifice plate 191,5 mm / 234,8 mm**				**Filter**						
	m_{tot} g	t_f ºC	p_{sf} kPa	Δp_f Pa	q_m kg/m^3	t ºC	φ %	p_a kPa	ρ kg/m^3	q_v m^3/s	Δp Pa	$\Delta p_{1,20}$ Pa
	Clean filter											
2002-02-01	0	20,1	-1,570	1695	1,415	20,3	26,2	101,2	1,199	1,180	139	139
2002-02-01	0	20,3	-1,027	1073	1,132	20,3	26,1	101,2	1,199	0,944	99	99
2002-02-01	0	20,2	-0,604	599	0,851	20,2	26,1	101,2	1,199	0,710	66	66
2002-02-01	0	20,1	-0,292	262	0,566	20,1	26,0	101,2	1,200	0,472	39	39
2002-02-01	0	20,3	-0,088	64	0,282	20,4	25,6	101,2	1,199	0,236	18	18
	Clean filter pressure drop is proportional to $(q_v)^n$, where n = 1,2640											
	Dust loading phase											
2002-02-01	0	23,4	-1,404	1067	1,126	24,1	36,5	102,2	1,193	0,944	99	98
2002-02-01	30	23,1	-1,416	1072	1,129	23,2	38,6	102,2	1,197	0,943	107	106
2002-02-01	30	23,2	-1,416	1070	1,127	23,6	39,9	102,2	1,194	0,944	107	106
2002-02-01	60	23,2	-1,425	1069	1,127	23,4	42,5	102,2	1,195	0,943	120	119
2002-02-01	60	23,2	-1,425	1069	1,127	23,4	42,5	102,2	1,195	0,943	120	119
2002-02-01	120	23,3	-1,464	1073	1,128	23,5	43,0	102,1	1,194	0,945	149	148
2002-02-01	120	23,1	-1,448	1069	1,125	23,5	57,3	102,1	1,192	0,945	149	148
2002-02-01	255	23,2	-1,561	1069	1,124	23,3	59,2	102,1	1,192	0,943	251	250
2002-02-01	255	23,7	-1,572	1072	1,125	24,0	57,8	102,1	1,190	0,945	249	248
2002-02-01	370	23,5	-1,664	1071	1,124	23,6	60,5	102,1	1,191	0,944	353	351
2002-02-01	370	23,8	-1,671	1071	1,124	24,3	58,2	102,1	1,188	0,946	349	347
2002-02-01	465	23,6	-1,123	1071	1,123	23,8	61,0	102,0	1,189	0,944	455	453

Symbols and units

m_{tot}	Cumulative mass of dust fed to filter, g	t_f	Temperature at air flow meter, ºC
p_a	Absolute air pressure upstream of filter, kPa	ρ	Air density upstream of filter, kg/m^3
p_{sf}	Air flow meter static pressure, kPa	φ	Relative humidity upstream of filter, %
q_m	Mass flow rate, kg/m^3	Δp	Measured filter pressure drop, Pa
q_v	Air flow rate at filter, m^3/s	Δp_f	Air flow meter differential pressure, Pa
t	Temperature upstream of filter, ºC	$\Delta p_{1,20}$	Filter pressure drop at air density 1,20 kg/m^3, Pa

Table D.4 — Pressure drop and arrestance after different dust loading phases

EN 779:2012 - Pressure drop and arrestance after different dust loading phases									
Air filter: WBF Leader 100									
Test no.: 12345									
Test aerosol: DEHS									
Air flow rate: 0,944 m^3/s									
Date	Δp_1 Pa	Δm g	m_{tot} g	Δp_2 Pa	m_1 g	m_2 g	Δm_{ff} g	m_d g	A %
2002-02-01	98	30	30	106	2291,8	2292,0	0,2	0,0	99,3
2002-02-01	106	30	60	119	2292,0	2292,3	0,3	0,0	99,0
2002-02-01	119	60	120	148	2292,4	2292,5	0,1	0,0	99,8
2002-02-01	148	135	255	250	2293,2	2293,6	0,4	0,0	99,7
2002-02-01	248	115	370	351	2293,6	2294,1	0,5	0,0	99,6
2002-02-01	347	95	465	453	2294,0	2294,2	0,2	0,0	99,8
Mass of tested device Initial mass of tested device: 5113,4 g Final mass of tested device: 5581,7 g									
Symbols and units A Arrestance, % m_d Dust in duct after device, g m_{tot} Cumulative mass of dust fed to filter, g m_1 Mass of final filter before dust increment, g m_2 Mass of final filter after dust increment, g Δm Dust increment, g Δm_{ff} Mass gain of final filter, g Δp_1 Pressure drop before dust increment, Pa Δp_2 Pressure drop after dust increment, Pa									

Table D.5 — Efficiency and pressure drop of untreated filter material

EN 779:2012 - Efficiency and pressure drop of untreated filter material					
Air filter: WBF Leader 100					
Test no.: 12345					
Test aerosol: DEHS					
Air flow rate: 45 m^3/h					
Media velocity: 0,05 m/s					
Size of material sample: 0,25 m^2					
Particle size µm		**Sample 1**	**Sample 2**	**Sample 3**	**Average**
		Efficiency %			
Interval	**Mean**	**Pressure drop**			
		100 Pa	98 Pa	102 Pa	100 Pa
0,20 - 0,25	0,22	59,9 ± 1,5	60,0 ± 1,8	60,2 ± 1,6	60,0
0,25 - 0,35	0,30	63,5 ± 2,8	63,0 ± 2,7	63,5 ± 2,5	63,3
0,35 - 0,45	0,40	70,5 ± 1,6	70,3 ± 1,8	71,0 ± 1,6	70,6
0,45 - 0,60	0,52	76,2 ± 1,8	75,9 ± 2,0	76,5 ± 1,9	76,2
0,60 - 0,75	0,67	86,0 ± 1,9	85,2 ± 1,7	86,3 ± 1,8	85,8
0,75 - 1,00	0,87	90,5 ± 1,0	90,4 ± 0,8	91,0 ± 1,0	90,6
1,00 - 1,50	1,22	94,7 ± 0,5	94,1 ± 0,5	95,0 ± 0,6	94,6
1,50 - 2,00	1,73	99,0 ± 0,3	98,8 ± 0,2	99,2 ± 0,2	99,0
2,00 - 3,00	2,45	99,8 ± 0,3	99,8 ± 0,2	99,9 ± 0,3	99,8
NOTE The uncertainty of the measured efficiencies is reported on a 95 % confidence level.					

Table D.6 — Efficiency and pressure drop of discharged filter material

EN 779:2012 - Efficiency and pressure drop of discharged filter material					
Air filter: WBF Leader 100					
Test no.: 12345					
Test aerosol: DEHS					
Air flow rate: 45 m^3/h					
Media velocity: 0,05 m/s					
Size of material sample: 0,25 m^2					
Particle size µm		**Sample 1**	**Sample 2**	**Sample 3**	**Average**
		Efficiency %			
Interval	**Mean**	**Pressure drop**			
		103 Pa	105 Pa	104 Pa	104 Pa
0,20 - 0,25	0,22	58,5 ± 1,6	61,0 ± 1,5	59,0 ± 1,8	59,5
0,25 - 0,35	0,30	62,5 ± 2,5	62,0 ± 2,8	62,0 ± 2,7	62,2
0,35 - 0,45	0,40	69,3 ± 1,6	69,3 ± 1,6	70,1 ± 1,8	69,6
0,45 - 0,60	0,52	76,0 ± 1,9	74,0 ± 1,8	76,0 ± 2,0	75,3
0,60 - 0,75	0,67	85,5 ± 1,8	85,0 ± 1,9	85,4 ± 1,7	85,3
0,75 - 1,00	0,87	90,5 ± 1,0	90,2 ± 1,0	89,5 ± 0,8	90,1
1,00 - 1,50	1,22	94,5 ± 0,6	94,0 ± 0,5	94,0 ± 0,5	94,2
1,50 - 2,00	1,73	99,0 ± 0,2	98,5 ± 0,3	98,5 ± 0,2	98,7
2,00 - 3,00	2,45	99,7 ± 0,3	99,6 ± 0,3	98,5 ± 0,2	99,3
NOTE The uncertainty of the measured efficiencies is reported on a 95 % confidence level.					

D.2 Examples of calculations

The calculations are based on the values and symbols presented in Table D.5.

Table D.7 — Test dust capacity and average arrestance

Symbol	**Loading point**						
	Pressure drop Pa						
$\Delta p_{1,20}$	99	106	119	148	250	351	453
	Dust loading g						
m_{tot}	0	30	60	120	355	370	465
	Dust passing device g						
$\Sigma(\Delta m_{ff} + m_d)$	-	0,2	0,5	0,6	1,0	1,5	1,7

Table D.7 *(continued)*

Symbol	Loading point						
	Average arrestance %						
A_m	-	99,3	99,2	99,5	99,7	99,6	99,6
	Test dust capacity g						
TDC	-	30	60	119	354	369	463

Average arrestance at 453 Pa

A_{m453} = (465 – 1,7)/465 × 100 = 99,6 %

Test dust capacity at 453 Pa

$$DHC_{453} = m_{tot} - \sum\left(\Delta m_{ff} + m_d\right) \quad \text{(D.1)}$$

TDC_{453} = 465 – [(0,2+ 0) + (0,3 + 0) + (0,1 + 0) + (0,4 + 0) + (0,5 + 0) + (0,2 + 0)] = 465 – 1,7 = 463,3 g

Interpolation of test dust capacity to 450 Pa

TDC_{450} = (450 – 351)/(453 – 351) × (463,3 – 368,5) + 368,5 = 92,0 + 368,5 = 460,5 g

Average arrestance at 450 Pa

The value calculated for the loading point closest to 450 Pa may be used, in this case at 453 Pa.

A_{m450} = 99,6 %

Table D.8 — Calculation of efficiency for 0,4 µm particle size

Symbol	Loading point						
	Pressure drop Pa						
$\Delta p_{1,20}$	99	106	119	148	250	351	453
	Dust loading g						
m_{tot}	0	30	60	120	355	370	465
	Number of upstream particles						
N_1	1 412	1 602	1 936	1 233	1 476	1 620	1 754
N_2	1 317	1 581	1 900	1 125	1 437	1 568	1 793
N_3	1 414	1 651	1 862	1 094	1 412	1 546	1 734
N_4	1 394	1 612	1 865	1 101	1 404	1 646	1 811
N_5	1 389	1 588	1 921	1 050	1 408	1 565	1 698
N_6	1 362	1 532	1 785	1 079	1 415	1 599	1 674
N_7	1 360	1 491	1 801	1 080	1 377	1 597	1 770

Table D.8 *(continued)*

Symbol	Loading point						
	Number of downstream particles						
n_1	428	268	185	43	10	10	16
n_2	417	266	213	41	12	10	9
n_3	415	257	184	34	10	8	12
n_4	388	254	202	41	5	19	11
n_5	423	240	195	32	10	18	11
n_6	388	264	209	25	7	14	11
	Single efficiency %						
E_1	68,63	83,16	90,35	96,35	99,31	99,37	99,10
E_2	69,46	83,54	88,68	96,30	99,16	99,36	99,49
E_3	70,44	84,25	90,13	96,90	99,29	99,50	99,32
E_4	72,12	84,13	89,33	96,19	99,64	98,82	99,37
E_5	69,25	84,62	89,48	96,99	99,29	98,86	99,35
E_6	71,49	82,53	88,34	97,68	99,50	99,12	99,36
	Efficiency %						
E_i	70,23	83,70	89,38	96,74	99,37	99,17	99,33
	Uncertainty of efficiency %- units						
σ	1,36	0,77	0,79	0,57	0,17	0,29	0,13
n	6	6	6	6	6	6	6
ν = n-1	5	5	5	5	5	5	5
$t_{1-\alpha/2}/(n)^{0,5}$	1,049	1,049	1,049	1,049	1,049	1,049	1,049
U_i	1,43	0,81	0,82	0,60	0,18	0,30	0,14
	Average efficiency %						
E_m	-	-	-	-	93,07	95,00	95,86
	Uncertainty of average efficiency %- units						
U_m	-		-	-	0,60	0,49	0,43

Efficiency E_1 at 453 Pa

The first single efficiency E_1 at 453 Pa is calculated in the following way:

E_1 = (1 - 16/[(1754+1793)/2]) × 100 = 99,10 %

Efficiency E_i at 453 Pa

The average of the six single efficiencies E_{i453} at 453 Pa is calculated in the following way:

E_{i453} = (99,10 + 99,49 + 99,32 + 99,37 + 99,35 + 99,36)/6 = 99,33 %

Uncertainty of efficiency E_i at 453 Pa

U_{i453} = 1,049 × 0,13 = 0,14 %-units

Average efficiency at the loading point 465 g and 453 Pa

E_{m453} = 1/465 [30 × (70,2 + 83,7)/2 + 30 × (83,7 + 89,4)/2 + 60 × (89,4 + 96,7)/2 + 135 × (96,7 + 99,4)/2 + 115 × (99,4 + 99,2)/2 + 95 (99,2 + 99,3)/2] = 95,86 %,

Interpolation of the average efficiency to 450 Pa

E_{m450} = (450 - 351)/(453 - 351) × (95,86 - 95,00) + 95,00 = 95,8 %

Uncertainty of the average efficiency at 453 Pa

U_{m453} = 1/465 [30 × (1,43 + 0,81)/2 + 30 × (0,81 + 0,82)/2 + 60 × (0,82 + 0,60)/2 + 135 × (0,60 + 0,18)/2 + 115 × (0,18 + 0,30)/2 +95 × (0,30 + 0,14)/2] = 0,43 %-units

Uncertainty of the average efficiency at 450 Pa

The value calculated for the loading point closest to 450 Pa may be used, in this case at 453 Pa.

U_{m450} = ± 0,43 %-units

D.3 Final results at 450 Pa

Average efficiency (0,4 µm)	E_m = (95,8 ± 0,4) %
Filter class	F9
Average arrestance	A_m > 99 % (99,6 %)
Test dust capacity	TDC = 461 g

Bibliography

[1] EN 779:2002, *Particulate air filters for general ventilation — Determination of the filtration performance*

[2] EN 1822-3, *High efficiency air filters (HEPA and ULPA) — Part 3: Testing flat sheet filter media*

[3] ISO 21501-1 *Determination of particle size distribution — Single particle light interaction methods — Part 1: Light scattering aerosol spectrometer*

[4] ISO 21501-4 *Determination of particle size distribution — Single particle light interaction methods — Part 4: Light scattering airborne particle counter for clean spaces*

[5] Eurovent 4/9:1997, *Method of testing air filters used in general ventilation for determination of fractional efficiency*

[6] IEST-RP-CC014, *Calibration and Characterization of Optical Airborne Particle Counters*

[7] ASME Standard MFC-3M - 1985, *Measurement of Fluid Flow in Pipes Using Orifice, Nozzle and Venturi*

[8] ANSI/ASHRAE 52.2-2007. *Method of Testing General Ventilation Air-Cleaning Devices for Removal Efficiency by Particle Size*

[9] Phillips B. A., Davis, W. T. and Dever, M., *Investigation of the Effect of a Topically Applied Tackifier in Reducing Particle Bounce in a Melt-Blown Air Filter* (Filtration & Separation, 1996, page 933)

[10] Qian Y., Willeke K., Ulevicius V. and Grinshpun S. A., *Particle Re-entrainment from Fibrous Filters* (*Aerosol Science and Technology*, 27:3)

[11] Kuehn T.H., Yang C. H. and Kulp R. H., *Effects of Fan Cycling on the Performance of Particulate Air filters used for IAQ Control* (Indoor Air '96, the 7th International Conference on Indoor Air Quality and Climate, Vol. 4, page 211)

[12] Rivers R. D. and Murphy D. J., *Determination of Air Filter Performance under Variable Air Volume (VAV) Conditions* (ASHRAE 675-RP:1996)

[13] EN 1822-1, *High efficiency air filters (EPA, HEPA and ULPA) — Part 1: Classification, performance testing, marking*